RESTRICTED

5803726

CARD CODE 5726

SHEET 4 OF 4

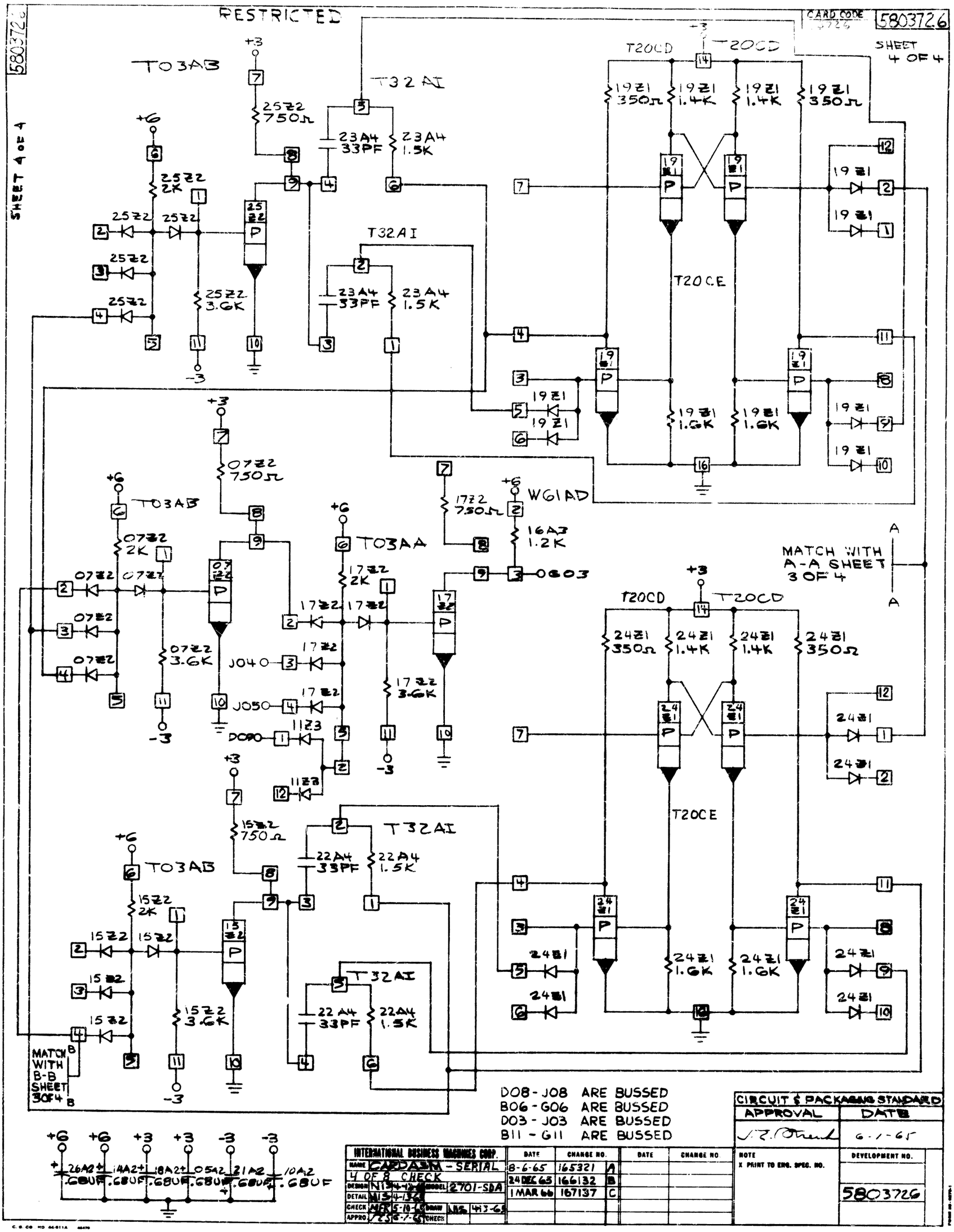

DO8 - JO8 ARE BUSSED
BO6 - GO6 ARE BUSSED
DO3 - JO3 ARE BUSSED
B11 - G11 ARE BUSSED

+6 +6 +3 +3 -3 -3

26A2 .68UF, 14A2 .68UF, 18A2 .68UF, 05A2 .68UF, 21A2 .68UF, 10A2 .68UF

CIRCUIT & PACKAGING STANDARD	
APPROVAL	DATE
J. R. Otrent	6-1-65

INTERNATIONAL BUSINESS MACHINES CORP.		DATE	CHANGE NO.		DATE	CHANGE NO.
NAME CARDASM - SERIAL 4 OF 8 CHECK		8-6-65	165321	A		
DESIGN N13-4-13 MODEL 2701-SDA		24 DEC 65	166132	B		
DETAIL N13-4-13		1 MAR 66	167137	C		
CHECK MPK 5-10-65 DRAW LAS 4-13-65						
APPRO. JSG 6-1-65 CHECK						

NOTE
X PRINT TO ENG. SPEC. NO.

DEVELOPMENT NO.

5803726

C. B. CO. HD 66-811A