5803728 STANDARDS CODE 8-7045 SHEET 10 OF 10 CARD CODE 3728 5803728

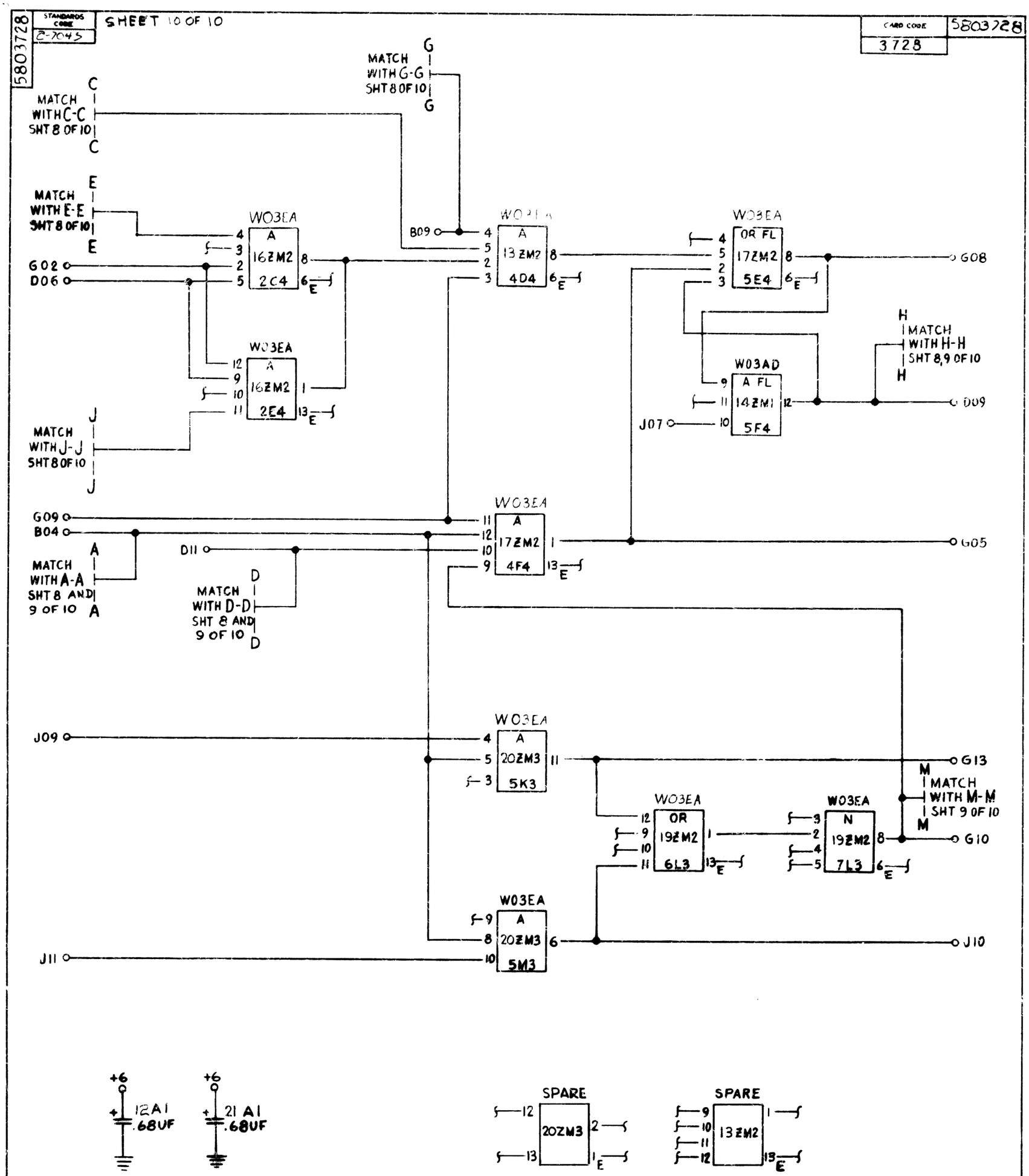

NOTE: SERVICE VOLTAGES FOR MONOLITHIC MODULES ARE:
+6-PIN 7,
GND-PIN 14.

CIRCUIT AND PACKAGING STANDARD	
APPROVAL	DATE
J E Short	7-26-65

INTERNATIONAL BUSINESS MACHINES CORP.											
NAME	CARD ASM- TRANSMIT EMITTER CONTROL										
DESIGN	RES	4-13-65	MODEL	2701-5DM							
DETAIL	RES	4-13-65									
CHECK		7-26-65	DRAW	EJS	5-11-65						
APPRO		7-26-65	CHECK	AJ	9-7-65						

DATE	CHANGE NO.	DATE	CHANGE NO.
9-15-65	165359 A		
21DEC65	165695 B		
13APR66	167147 C		

NOTE
X PRINT TO ENG. SPEC. NO. 895291

DEVELOPMENT NO. 680-1091

5803728

C. B. CO., NO. 66-811A 46340