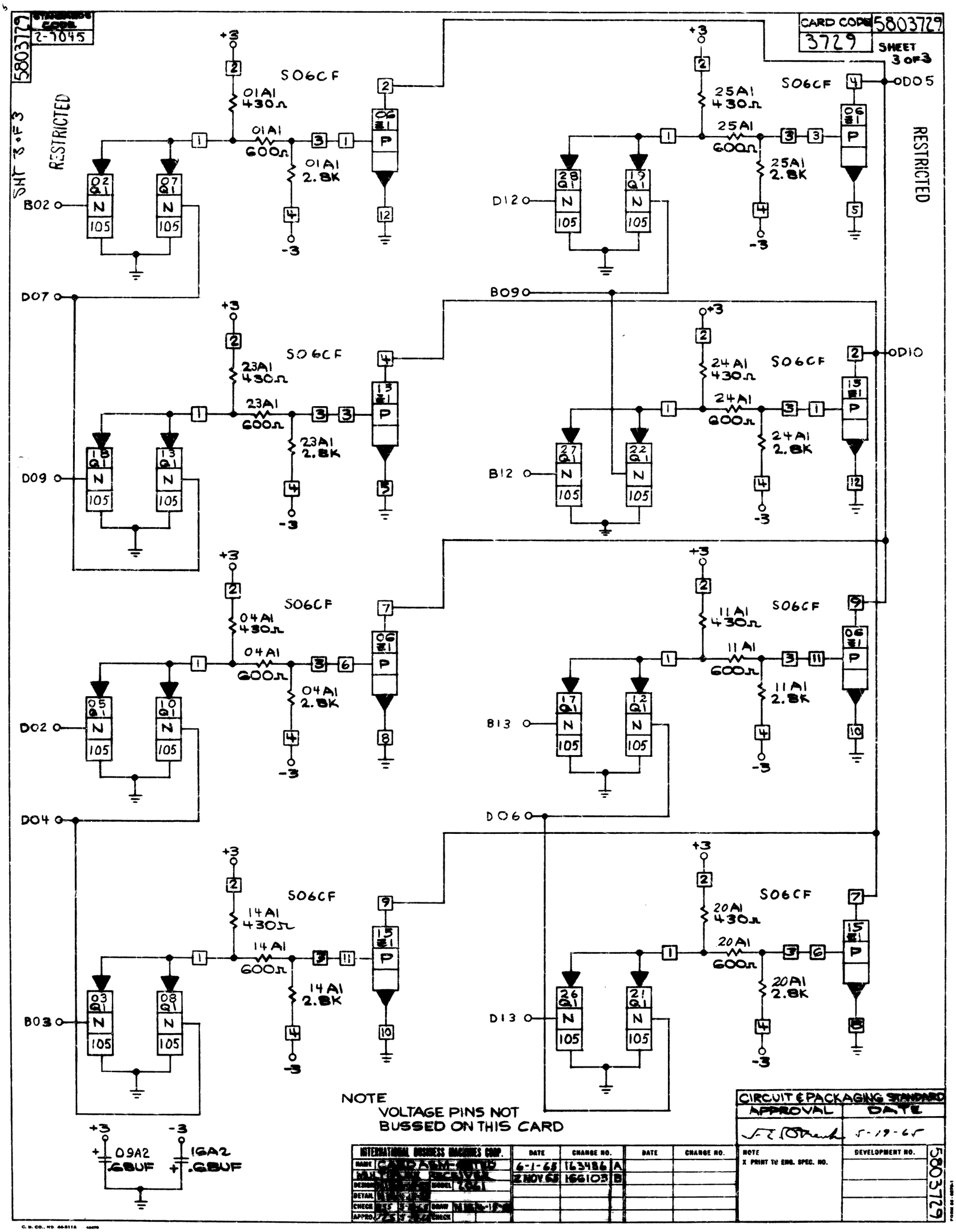
5803729
2-1045
CARD CODE 5803729
3729
SHEET 3 OF 3
SHT 3 OF 3
RESTRICTED
RESTRICTED
S06CF
01A1 430Ω
01A1 600Ω
01A1 2.8K
B02
D07
D12
25A1 430Ω
25A1 600Ω
25A1 2.8K
D05
23A1 430Ω
23A1 600Ω
23A1 2.8K
D09
B09
24A1 430Ω
24A1 600Ω
24A1 2.8K
B12
D10
04A1 430Ω
04A1 600Ω
04A1 2.8K
D02
D04
B13
11A1 430Ω
11A1 600Ω
11A1 2.8K
D06
14A1 430Ω
14A1 600Ω
14A1 2.8K
B03
20A1 430Ω
20A1 600Ω
20A1 2.8K
D13
+3
-3
NOTE
VOLTAGE PINS NOT
BUSSED ON THIS CARD
09A2 .68UF
16A2 .68UF
CIRCUIT & PACKAGING STANDARD
APPROVAL
DATE
5-19-65
INTERNATIONAL BUSINESS MACHINES CORP.
DATE
CHANGE NO.
6-1-65
163486
A
2 NOV 65
166103
B
NOTE
X PRINT TO ENG. SPEC. NO.
DEVELOPMENT NO.
5803729