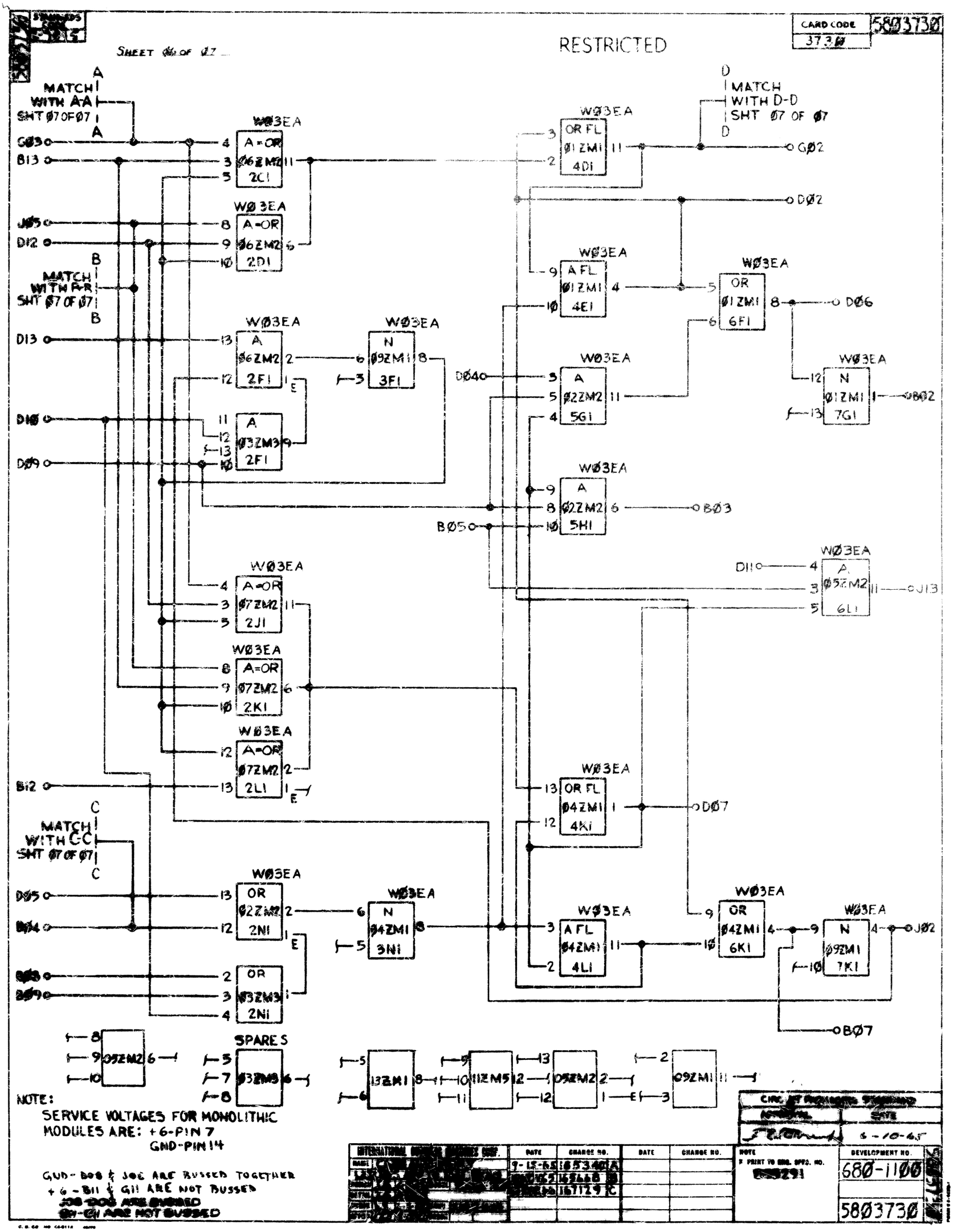

NOTE:
SERVICE VOLTAGES FOR MONOLITHIC MODULES ARE: +6-PIN 7
GND-PIN 14

GND-B08 & J08 ARE BUSSED TOGETHER
+6-B11 & G11 ARE NOT BUSSED
J09-D09 ARE BUSSED
G11-C11 ARE NOT BUSSED

DATE	CHANGE NO.	DATE	CHANGE NO.
9-15-65	165340 A		
	165246 B		
	167129 C		

DEVELOPMENT NO. 680-1100

5803730