STANDARDS CODE 2-7045

5803732

SHEET 4 OF 4

CARD CODE 5803732

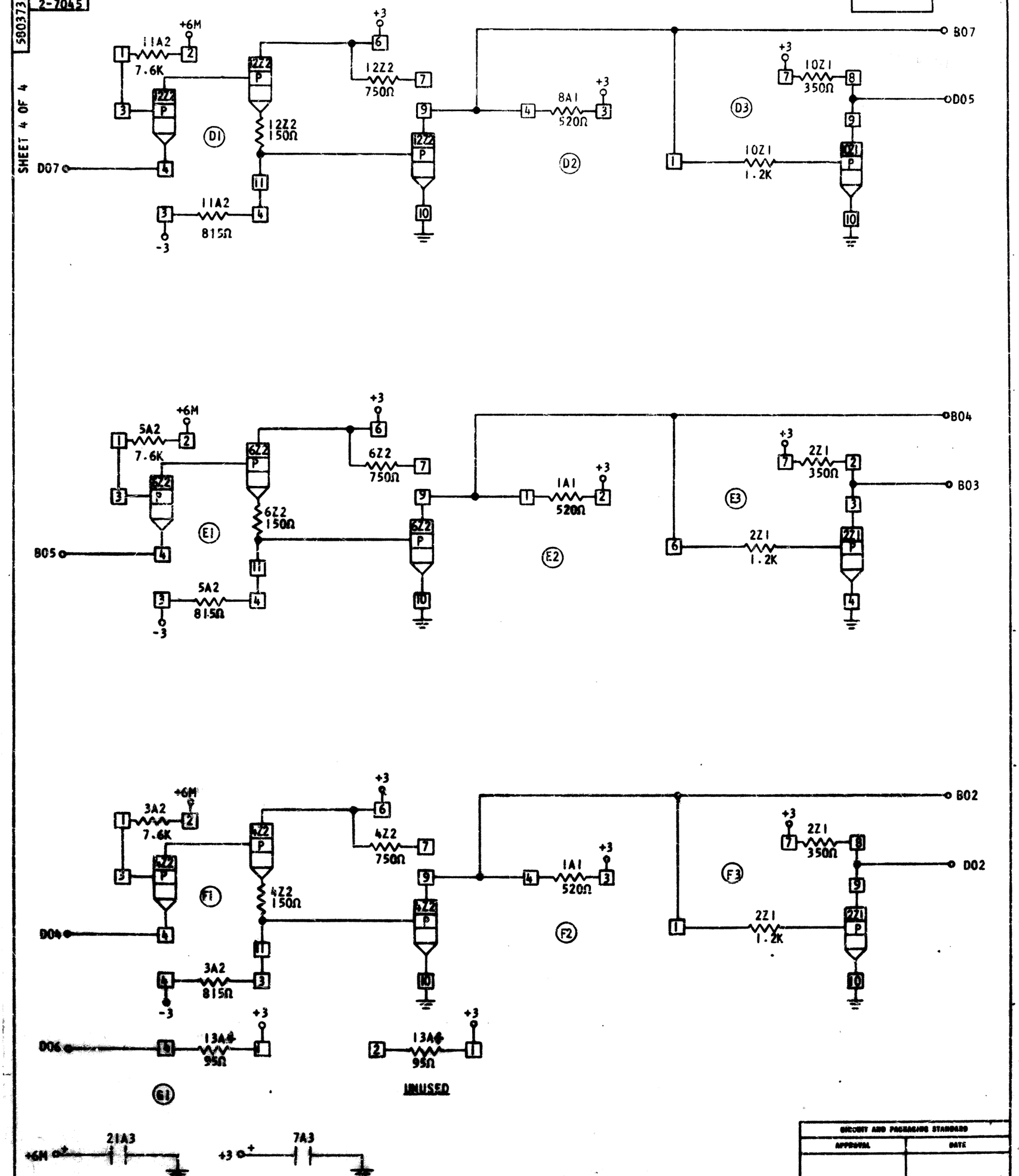


CIRCUIT AND PACKAGING STANDARD

| APPROVAL | DATE |
|---|---|
| | |

| DATE | CHANGE NO. | APPROVAL | DATE | CHANGE NO. | APPROVAL | DEVELOPMENT NO. |
|---|---|---|---|---|---|---|
| | DEV 1830 | | | | | |
| | DEV 1[illegible] | | | | | |
| | 1[illegible] | | | | | |
| 12 NOV 6[illegible] | 165385 B | | | | | |

5803732

C