STANDARDS CODE 2-7045

5803736

RESTRICTED

CARD CODE 5803736

SHEET 3 OF 4

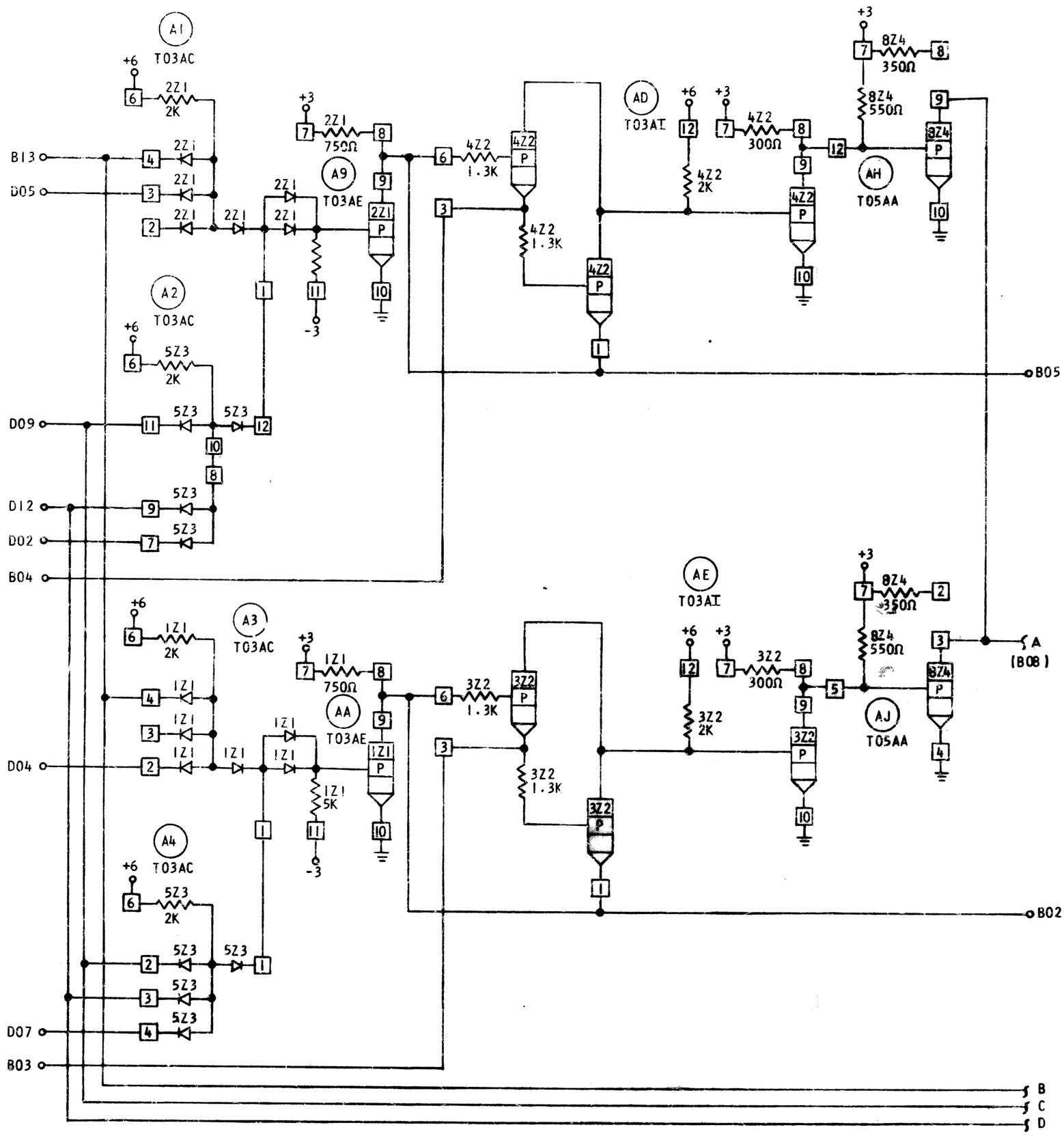


NOTE

"NO BUSSING CONDITION"

| CIRCUIT AND PACKAGING STANDARD | |
|---|---|
| APPROVAL | DATE |
| | |

| INTERNATIONAL BUSINESS MACHINES CORP. | DATE | CHANGE NO. | APPROVAL | DATE | CHANGE NO. | APPROVAL | DEVELOPMENT NO. |
|---|---|---|---|---|---|---|---|
| NAME 4 BIT MATCH CIRCUIT | 6-8-64 | DEV 3530 | | | | | |
| DRAWN [illegible] MODEL | 8-3-64 | 161213 | | | | | |
| DETAIL [illegible] SCALE NONE | 10-15-64 | 162024 | | | | | |
| CHECK [illegible] DRAW VMD 6-4-64 | 1FEB67 | 169845 C | | | | | |
| APPRO [illegible] CHECK | | | | | | | |

5803736

C