STANDARDS CODE 2-7045

5803737

CARD CODE 5803737

RESTRICTED

SHEET 4 OF 4

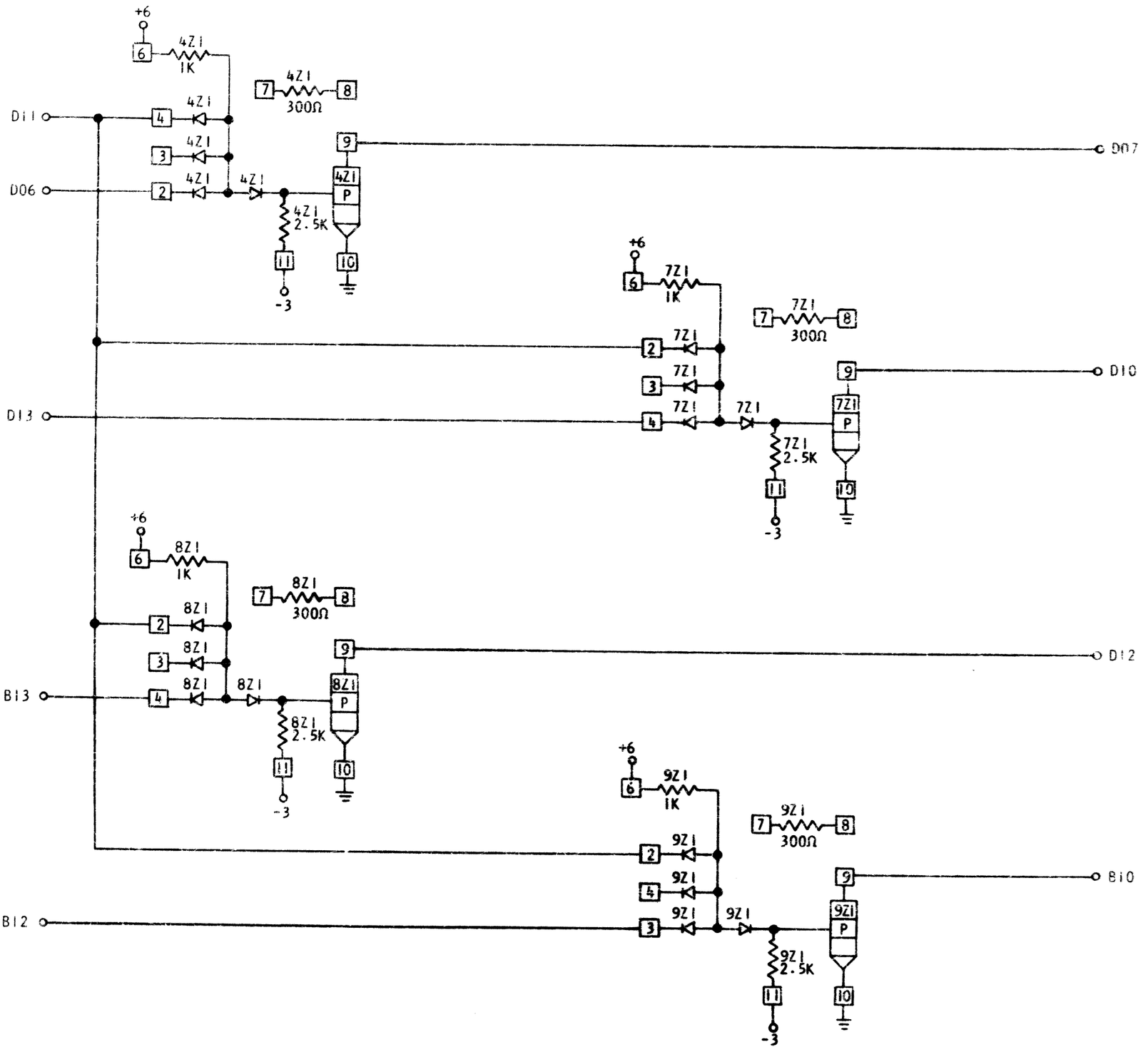

CIRCUIT AND PACKAGING STANDARD

APPROVAL	DATE

INTERNATIONAL BUSINESS MACHINES CORP.

NAME: NINE GATED APC'S W O LOAD

DRAWN: MD 11-2-64 MODEL:

DETAIL: MD 11-2-64 SCALE: NONE

CHECK: PF 11-2-64 DRAWN: MD 6-4-64

APPRD: CHECK: FM 6-10-64

DATE	CHANGE NO.	APPROVAL	DATE	CHANGE NO.	APPROVAL	DEVELOPMENT NO.
6-5-64	DEV 3185					
8-27-64	161224					

5803737

C