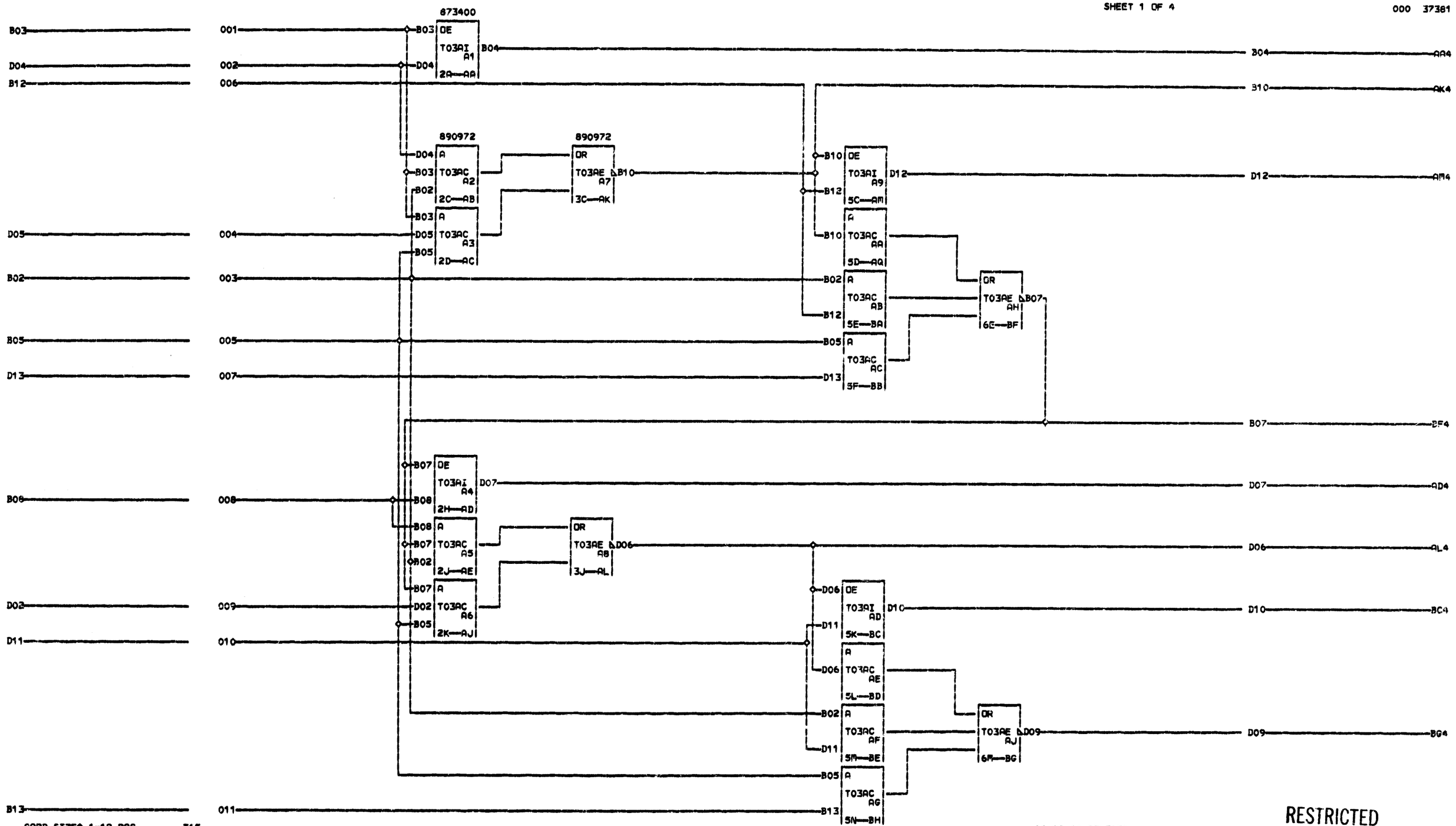

CARD SIZE◊ 1-12 PAC T65
VOLTAGE PINS
3 +3V◊D03 +6V◊B11
7 -3V◊B06 GND◊D08
3 SPECIAL RESTRICTED
8
1

000

06-08-64 DEV3178
08-12-64 161215

RESTRICTED

	1 UPPER AND DOWNER	
DATE	08-12-64 MACH. ASSEMBLY	37381
LOG	1724 FRAME	
	L D HOWE P.N. 5803738	
IBM CORP.	ED BLK. BJ	000