STANDARDS CODE 2-6235

5803744

SHEET 3 OF 3

RESTRICTED

CARD CODE 5803744

SHEET 3 OF 3

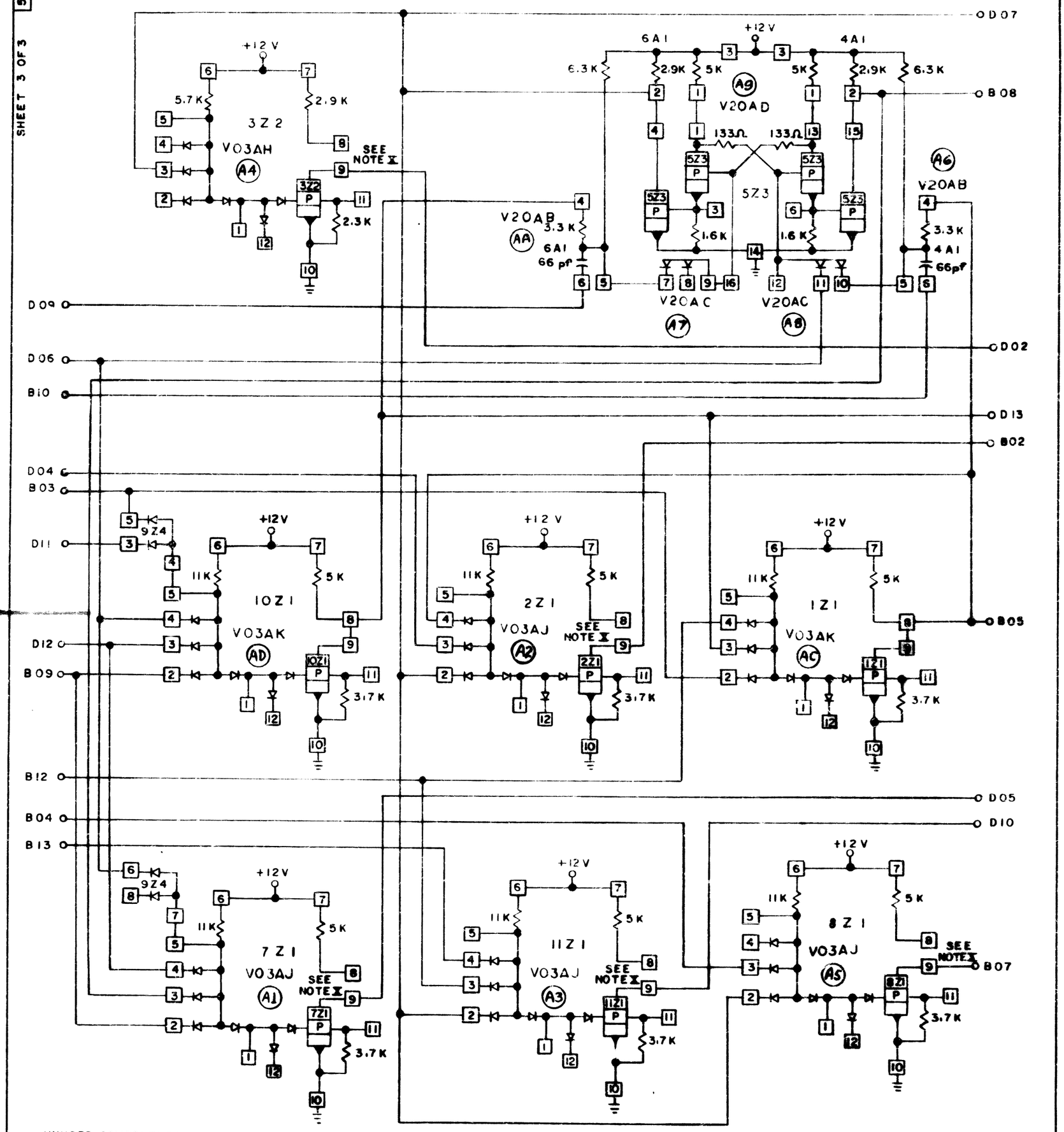

UNUSED COMPONENTS

NOTES

X THESE PINS ARE NOT CONNECTED (DOT COLLECTORS)

CIRCUIT AND PACKAGING STANDARD	
APPROVAL	DATE

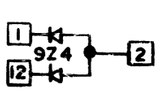

C

INTERNATIONAL BUSINESS MACHINES CORP.																
NAME	CARD 41						DATE	CHANGE NO.		APPROVAL	DATE	CHANGE NO.		APPROVAL	DEVELOPMENT NO.	5803744
							1-13-65	160927	A							
							15AUG67	171433	B							
DESIGN	EGC	1-12-65	MODEL													
DETAIL	EGC	1-12-65	SCALE	NONE												
CHECK			DRAW	JPS	1-15-65											
APPRO	WKF		CHECK													