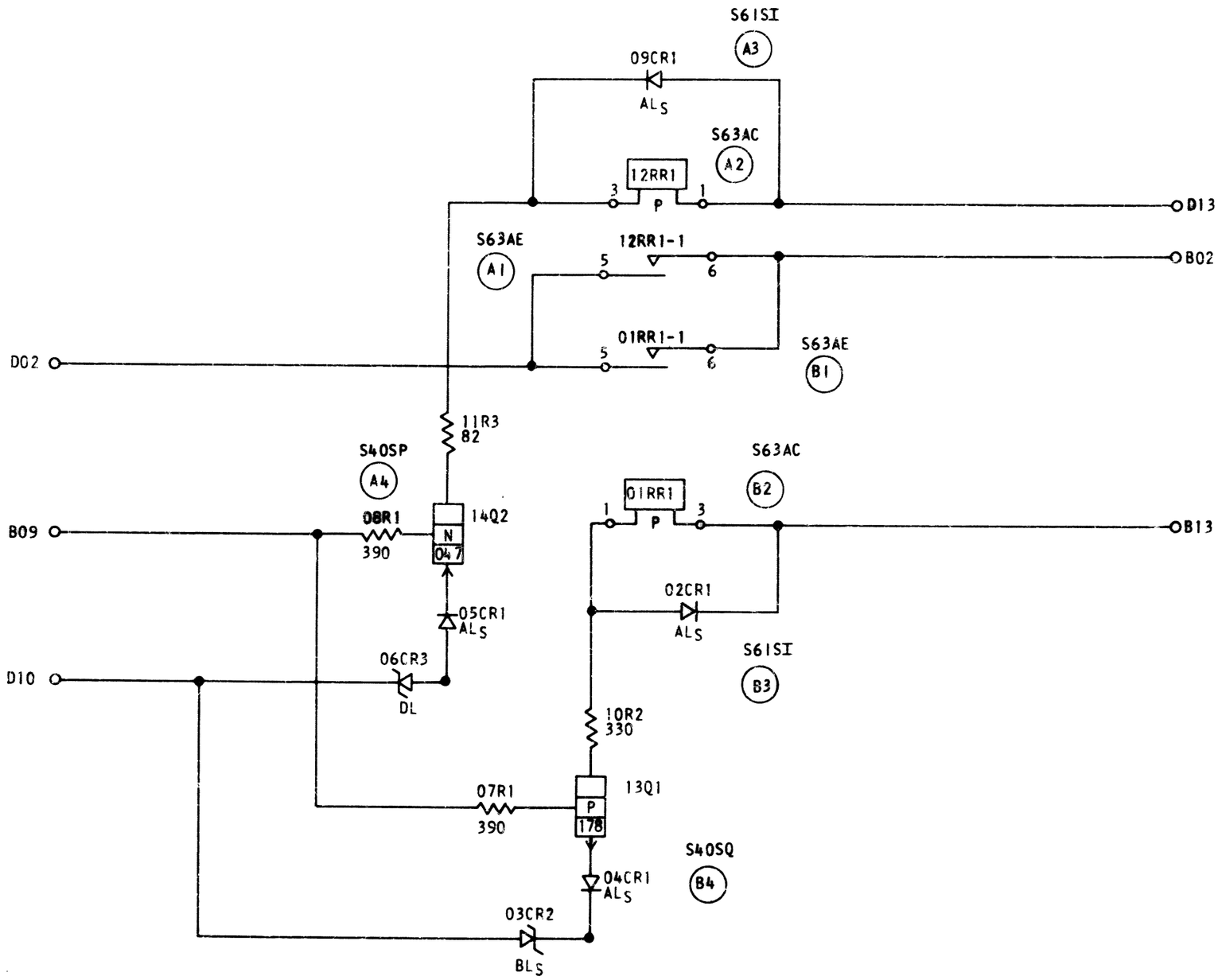


NO BUSSING EXISTENT ON THIS CARD

| CIRCUIT AND PACKAGING STANDARD | |
|---|---|
| APPROVAL | DATE |
| | |

| INTERNATIONAL BUSINESS MACHINES CORP. | DATE | CHANGE NO. | APPROVAL | DATE | CHANGE NO. | APPROVAL | DEVELOPMENT NO. |
|---|---|---|---|---|---|---|---|
| NAME OVERLOAD SWITCH | 10-20-65 | 167412 | | | | | SS254 |
| DESIGN HW 8-17-4 MODEL | 23DEC65 | 167062 B | | | | | |
| DETAIL EDD 8-30-4 SCALE NONE | 7DEC67 | 172661 C | | | | | |
| CHECK MC 8-3-4 DRAW EDD 8-30-4 | | | | | | | 5803754 |
| APPRO CHECK MC 8-3-4 | | | | | | | |

5803754

C