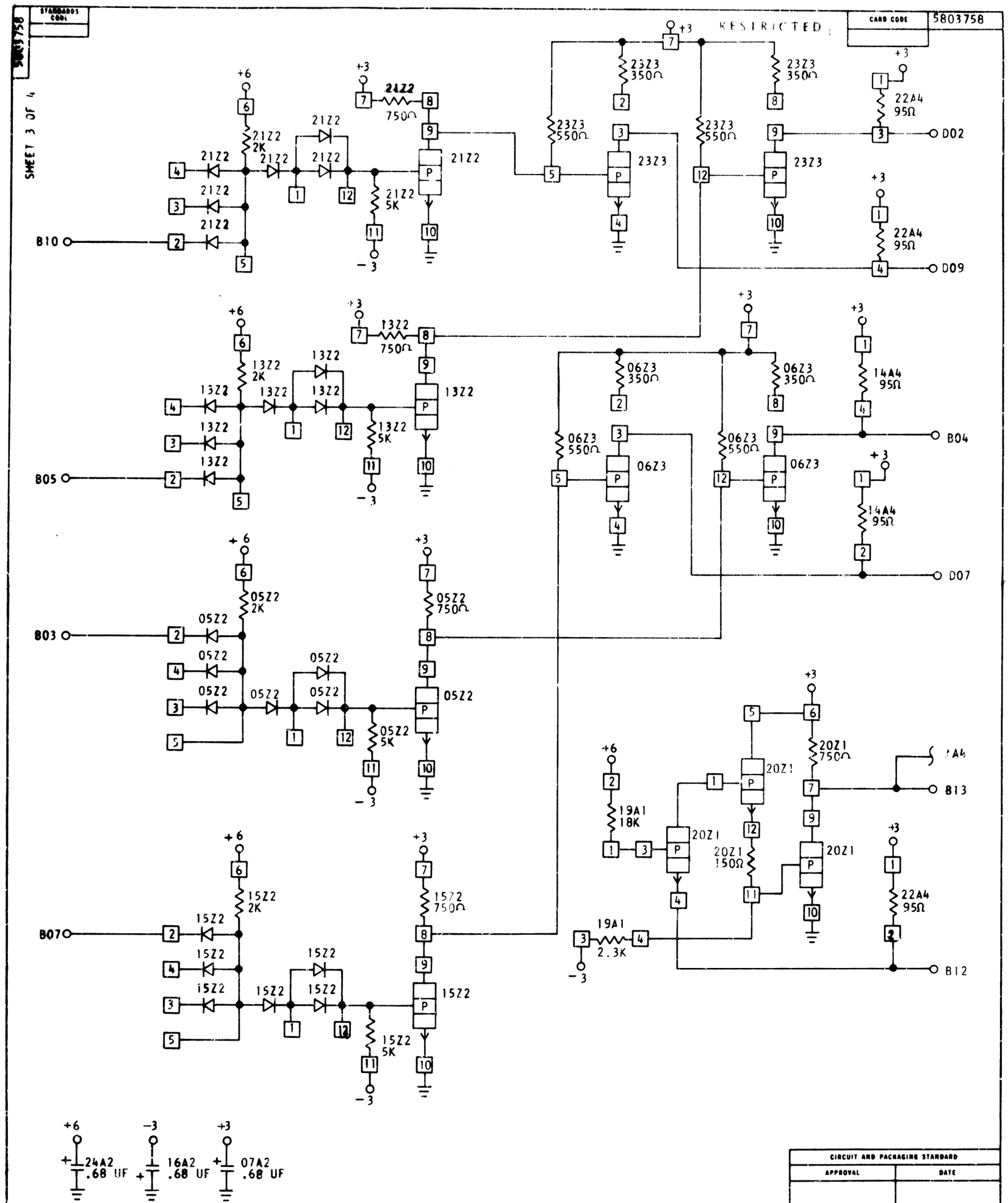
STANDARDS CODE
5803758
SHEET 3 OF 4
RESTRICTED
CARD CODE
5803758
B10
B05
B03
B07
B04
B13
B12
D02
D09
D07
21Z2
13Z2
05Z2
15Z2
06Z3
23Z3
20Z1
19A1
22A4
14A4
24A2 .68 UF
16A2 .68 UF
07A2 .68 UF
CIRCUIT AND PACKAGING STANDARD
APPROVAL
DATE
INTERNATIONAL BUSINESS MACHINES CORP.
LOADED
DESIGN
DETAIL
CHECK
APPRO
MODEL
SCALE
DRAW
CHECK
1800
NONE
CHANGE NO.
DEVELOPMENT NO.
SS365
5803758
C