STANDARDS CODE

5803758

CARD CODE 5803758

RESTRICTED

SHEET 4 OF 4

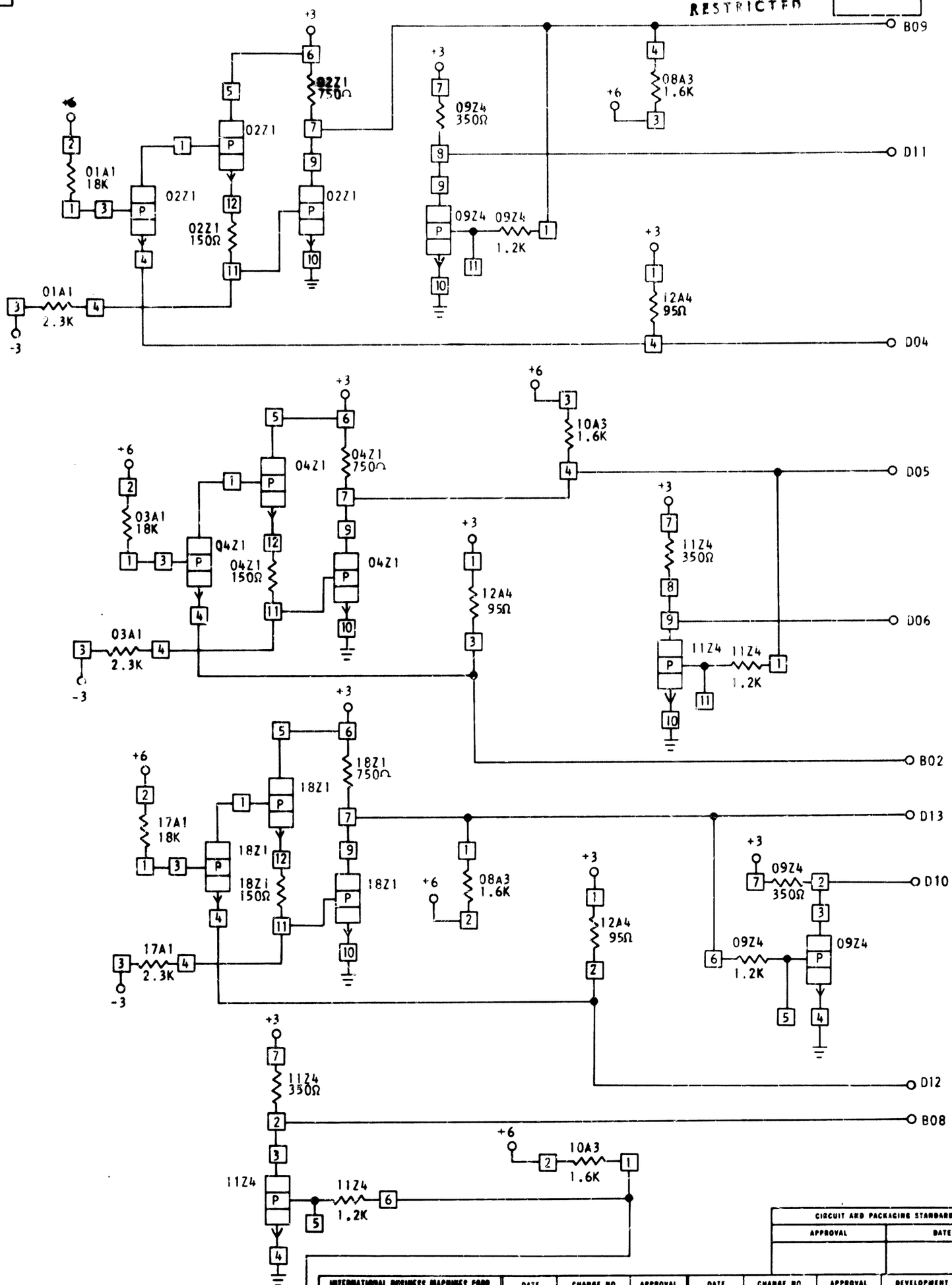

CIRCUIT AND PACKAGING STANDARD	
APPROVAL	DATE

INTERNATIONAL BUSINESS MACHINES CORP.					DATE	CHARGE NO.	APPROVAL	DATE	CHARGE NO.	APPROVAL	DEVELOPMENT NO.
NAME	DRIVER/TERMINATOR LOADED				6-4-65	163294 A					SS365
DESIGN	TH 2-2-5	MODEL	1800		5-1-65	164213 B					
DETAIL	RO 2-11-5	SCALE	NONE		7-1-65	164811 C					
CHECK	CWA 2-24-5	DRAW	CDE 2-11-5								5803758
APPRO	DEC 4-13-5	CHECK									

5803758

C