STANDARDS CODE 5803759

CARD CODE 5803759

RESTRICTED

SHEET 3 OF 3

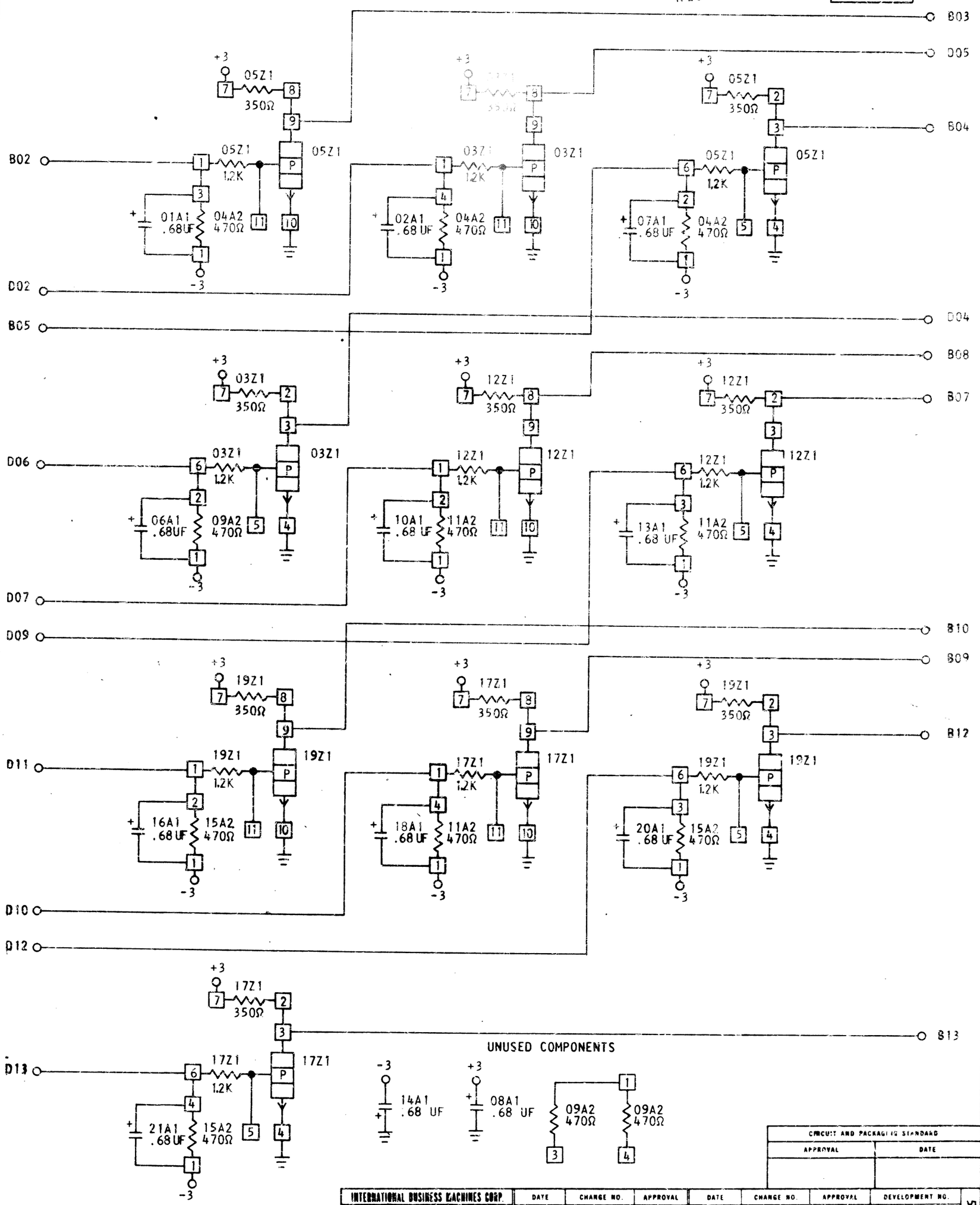

CIRCUIT AND PACKAGING STANDARD	
APPROVAL	DATE

INTERNATIONAL BUSINESS MACHINES CORP.				DATE	CHANGE NO.	APPROVAL	DATE	CHANGE NO.	APPROVAL	DEVELOPMENT NO.	
NAME	TO INTERGRATORS WITH INVERTERS			02-24-65	163296					SS264	5803759
DESIGN	SJF 2-4-5	MODEL	1800								
DETAIL	DM 2-27-5	SCALE	NONE								
CHECK		DRAW	DM 2-27-5							5803759	
APPRO	RBC 3-17-65	CHECK	DM 2-27-5								

C