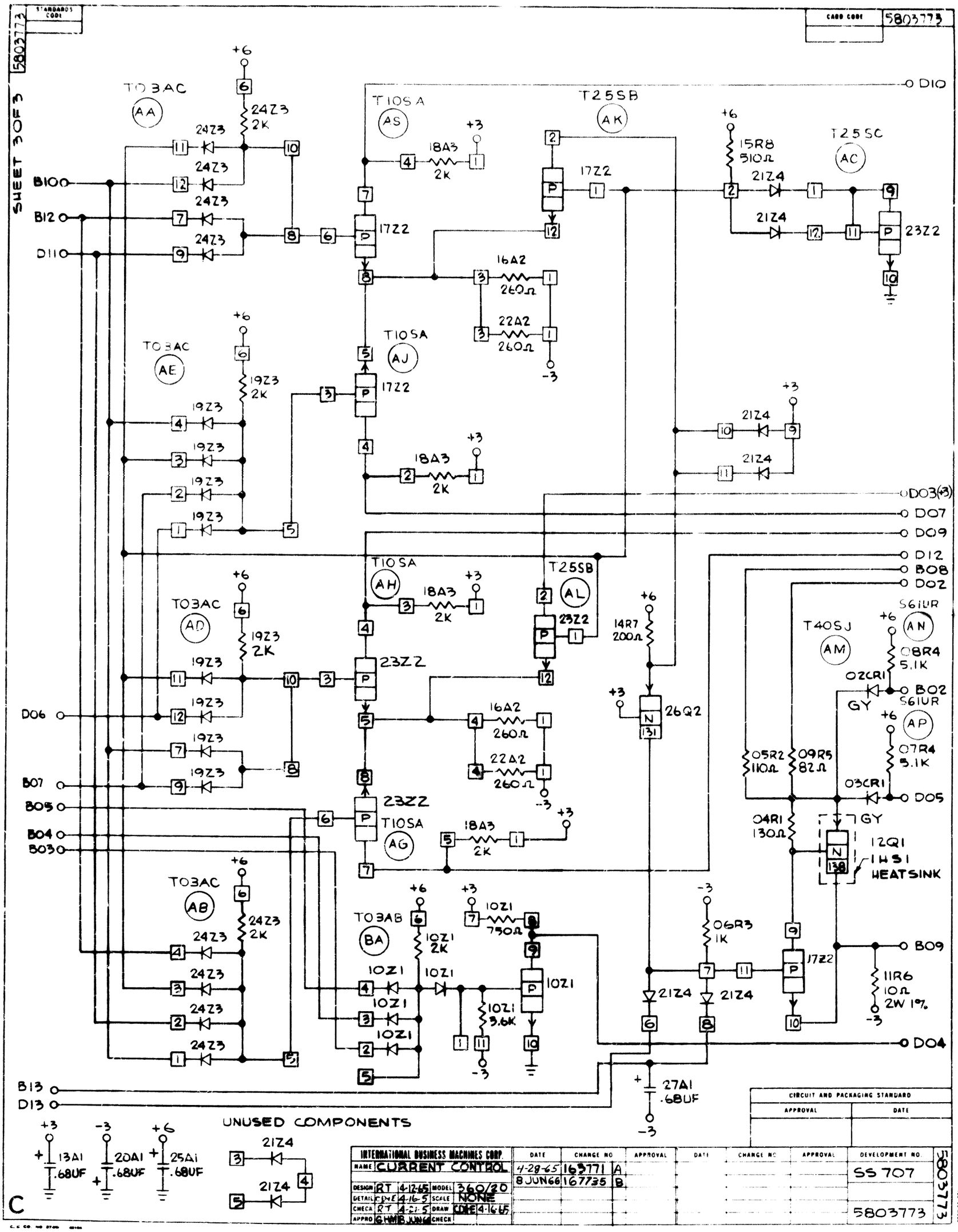
STANDARDS CODE
5803773
CARD CODE
5803773
SHEET 3 OF 3
T03AC
AA
T10SA
AS
T25SB
AK
T25SC
AC
T03AC
AE
T10SA
AJ
T03AC
AD
T10SA
AH
T25SB
AL
T40SJ
AM
S61UR
AN
AP
T10SA
AG
T03AC
AB
T03AB
BA
B10
B12
D11
D06
B07
B05
B04
B03
B13
D13
D10
D03(+3)
D07
D09
D12
B08
D02
B02
D05
B09
D04
24Z3
2K
18A3
2K
17Z2
16A2
260Ω
22A2
260Ω
15R8
510Ω
21Z4
23Z2
19Z3
2K
10Z1
2K
10Z1
750Ω
10Z1
3.6K
14R7
200Ω
26Q2
05R2
110Ω
09R5
82Ω
08R4
5.1K
02CR1
07R4
5.1K
03CR1
04R1
130Ω
12Q1
1HS1
HEATSINK
06R3
1K
11R6
10Ω
2W 1%
27A1
.68UF
13A1
.68UF
20A1
.68UF
25A1
.68UF
UNUSED COMPONENTS
CIRCUIT AND PACKAGING STANDARD
APPROVAL
DATE
INTERNATIONAL BUSINESS MACHINES CORP.
NAME CURRENT CONTROL
DESIGN RT 4-12-65
MODEL 360/20
DETAIL
SCALE NONE
CHECK
DRAW
APPRO
CHECK
DATE
CHANGE NO
APPROVAL
DEVELOPMENT NO.
4-28-65 163771 A
8 JUN66 167735 B
SS 707
5803773
C