STANDARDS CODE 2-7045

5803788

RESTRICTED
FIELD USE

CARD CODE 5803788

SHEET 4 OF 4

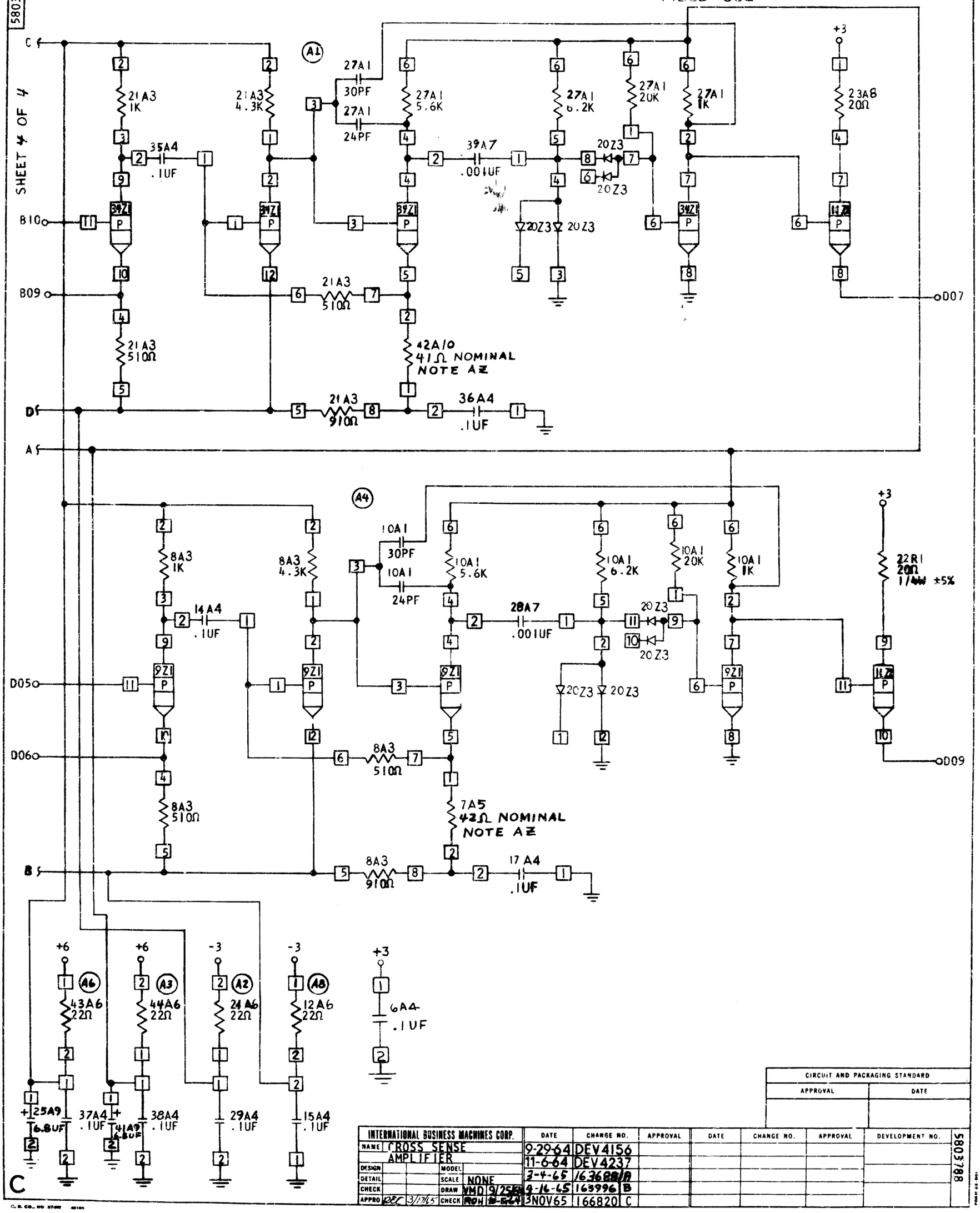

CIRCUIT AND PACKAGING STANDARD	
APPROVAL	DATE

INTERNATIONAL BUSINESS MACHINES CORP.			
NAME	CROSS SENSE AMPLIFIER		
DESIGN		MODEL	
DETAIL		SCALE	NONE
CHECK		DRAW	WMD 9/25/64
APPRO	REC 3/17/65	CHECK	ROW 9-5-64

DATE	CHANGE NO.	APPROVAL	DATE	CHANGE NO.	APPROVAL	DEVELOPMENT NO.
9-29-64	DEV4156					
11-6-64	DEV4237					
3-4-65	163688A					
4-16-65	163996	B				
3NOV65	166820	C				

5803788

C

C.B. CO., NO. 37-0W 48104