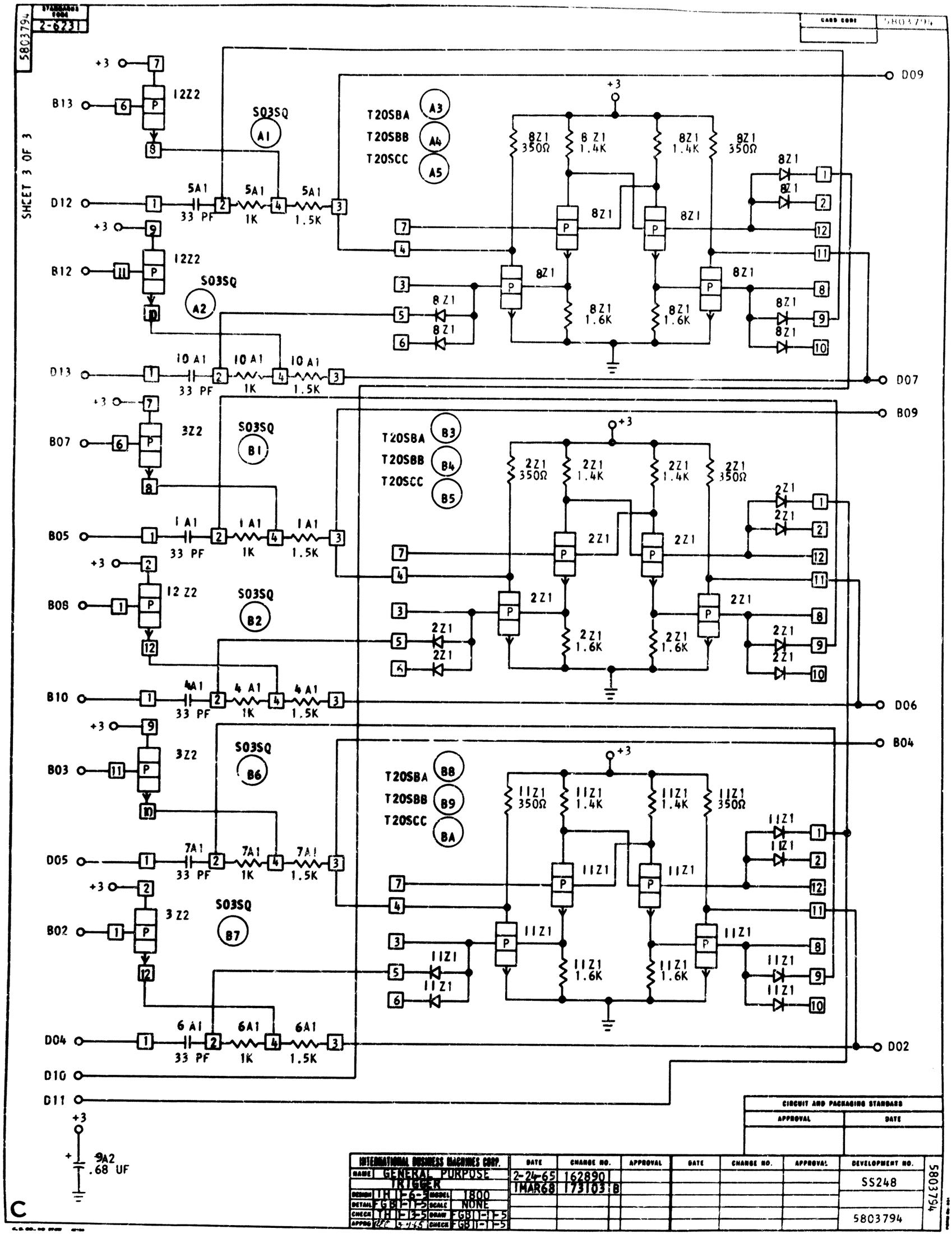
5803794
2-6231
SHEET 3 OF 3
CARD CODE
5803794
+3
B13
12Z2
S03SQ
A1
T20SBA
T20SBB
T20SCC
A3
A4
A5
D09
D12
5A1
33 PF
1K
1.5K
8Z1
350Ω
1.4K
1.6K
B12
A2
D13
10 A1
D07
B07
3Z2
B1
B3
B4
B5
2Z1
B05
1 A1
B08
12 Z2
B2
B09
B10
4A1
4 A1
D06
B03
B6
B8
B9
BA
11Z1
B04
D05
7A1
B02
B7
D04
6 A1
6A1
D02
D10
D11
9A2
.68 UF
CIRCUIT AND PACKAGING STANDARDS
APPROVAL
DATE
INTERNATIONAL BUSINESS MACHINES CORP.
NAME GENERAL PURPOSE TRIGGER
DESIGN TH 1-6-5
DETAIL FGB 1-11-5
CHECK TH 1-13-5
APPRO
MODEL 1800
SCALE NONE
DRAW FGB 1-11-5
CHECK FGB 1-11-5
DATE
CHANGE NO.
APPROVAL
DEVELOPMENT NO.
2-24-65 162890
1MAR68 173103 B
SS248
5803794
C