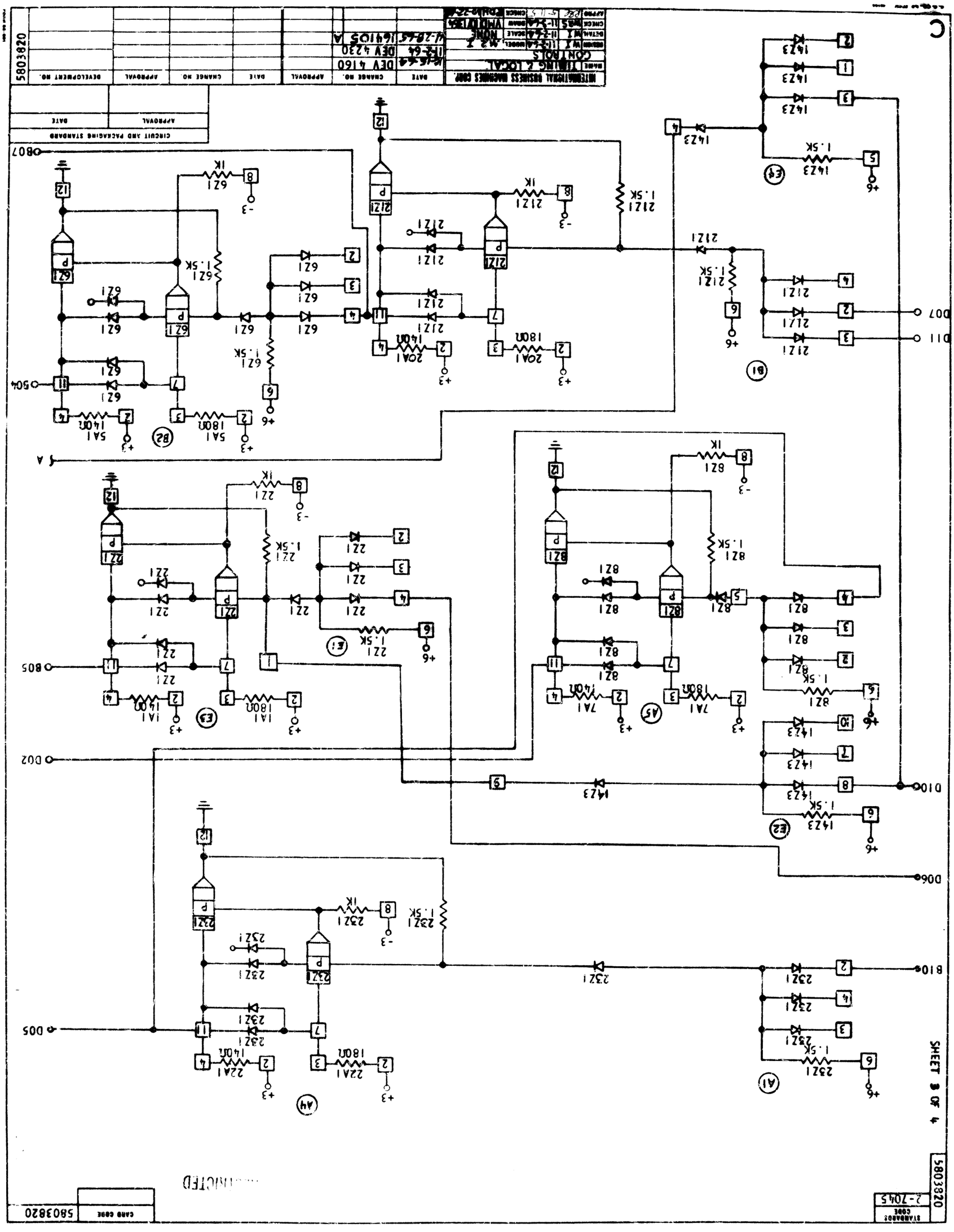
INTERNATIONAL BUSINESS MACHINES CORP.
TIMING & LOCAL CONTROLS
M21
NONE
VMDLV1354
DEV 4160
DEV 4230
16910S A
5803820
CIRCUIT AND PACKAGING STANDARD
APPROVAL
DATE
CHANGE NO.
DEVELOPMENT NO.
SHEET 3 OF 4
CARD CODE
5803820
UNCLASSIFIED
D11
D07
D10
D06
B10
D02
D05
B05
D04
B07
A1
A4
A5
B1
B2
E1
E2
E3
E4