STANDARDS CODE 2-7045

5803820

CARD CODE 5803820

RESTRICTED

SHEET 4 OF 4

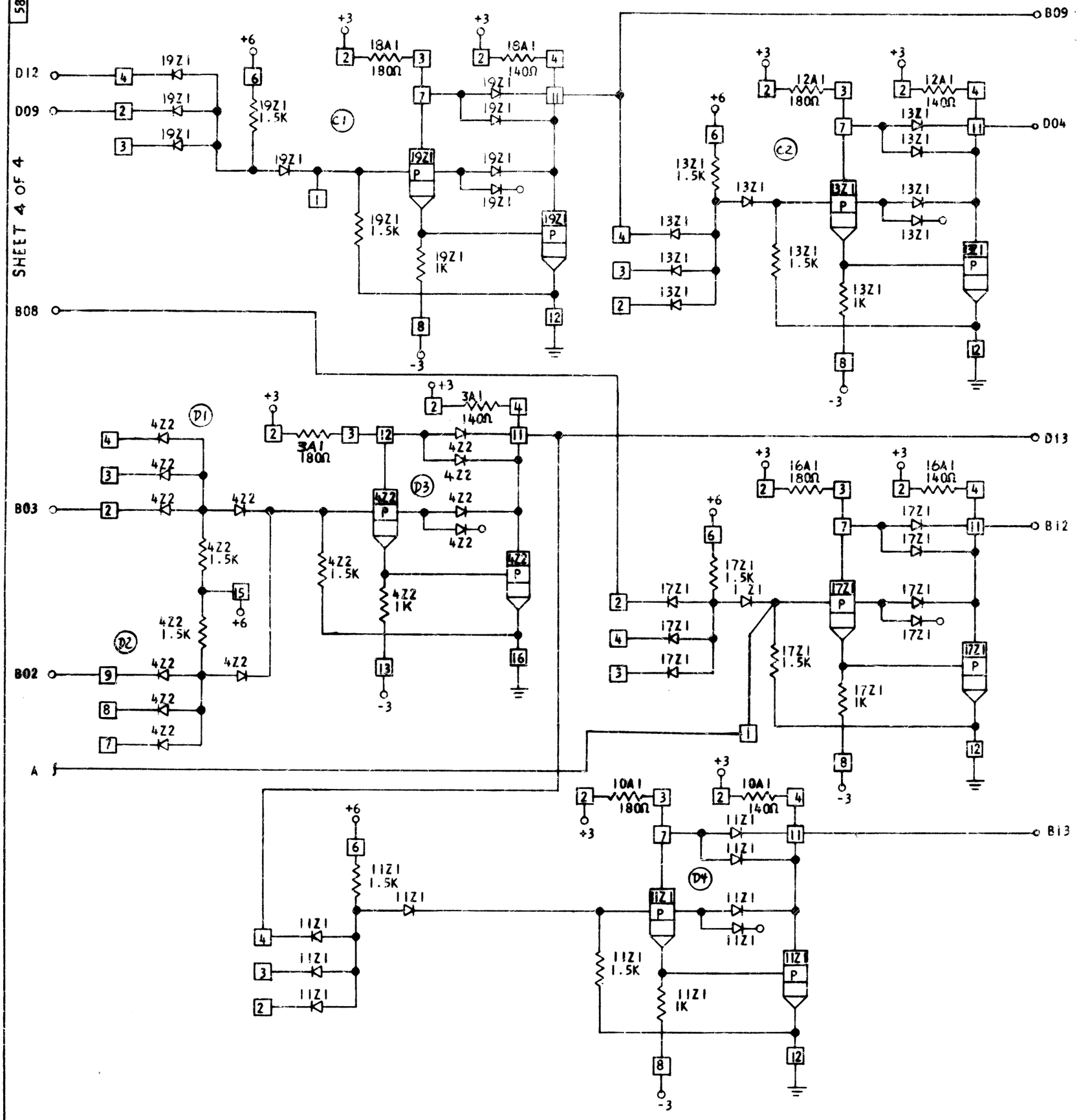

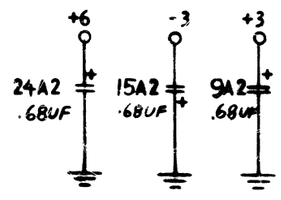

CIRCUIT AND PACKAGING STANDARD	
APPROVAL	DATE

INTERNATIONAL BUSINESS MACHINES CORP.					DATE	CHANGE NO.	APPROVAL	DATE	CHANGE NO.	APPROVAL	DEVELOPMENT NO.
NAME	TIMING & LOCAL CONTROLS				10-16-64	DEV 4160					5803820
DESIGN	WI	11-2-64	MODEL	M2 I	11-2-64	DEV 4230					
DETAIL	WI	11-2-64	SCALE	NONE	4-28-65	164105 A					
CHECK	WRS	11-5-64	DRAW	MMD EV1366							
APPRO	RRC	3/15/5	CHECK	RDM 10-22-64							

C