STANDARDS CODE 2-7045

5803822

SHEET 5 OF 5

CARD CODE 5803822

RESTRICTED

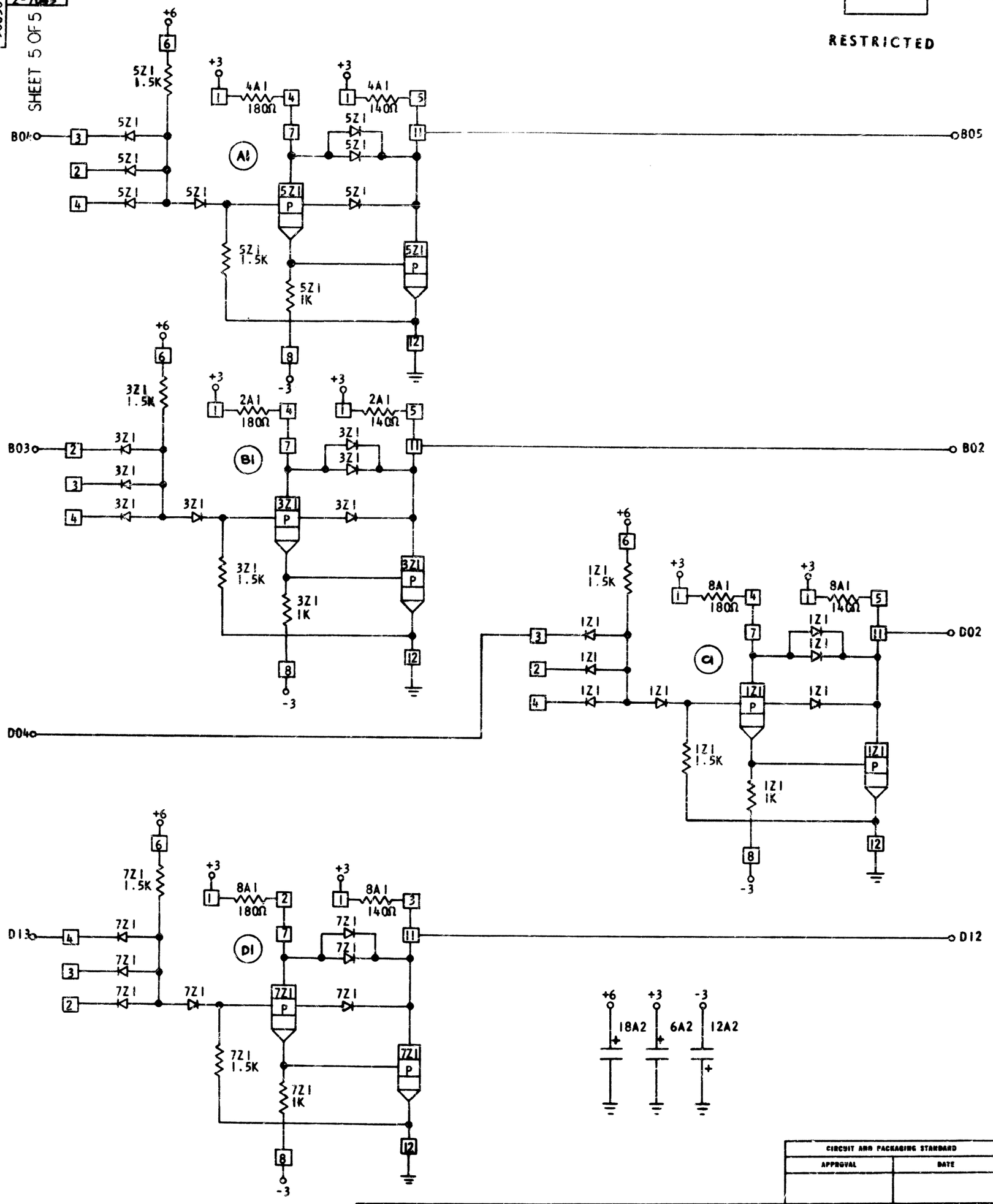

CIRCUIT AND PACKAGING STANDARD	
APPROVAL	DATE

INTERNATIONAL BUSINESS MACHINES CORP.	DATE	CHANGE NO.	APPROVAL	DATE	CHANGE NO.	APPROVAL	DEVELOPMENT NO.
NAME INVERTERS	10-15-64	DEV 4163					5803822
	4-23-65	163960 A					

C