STANDARDS CODE 2-7045

5803827

CARD CODE 5803827

SHEET 3 OF 4

RESTRICTED

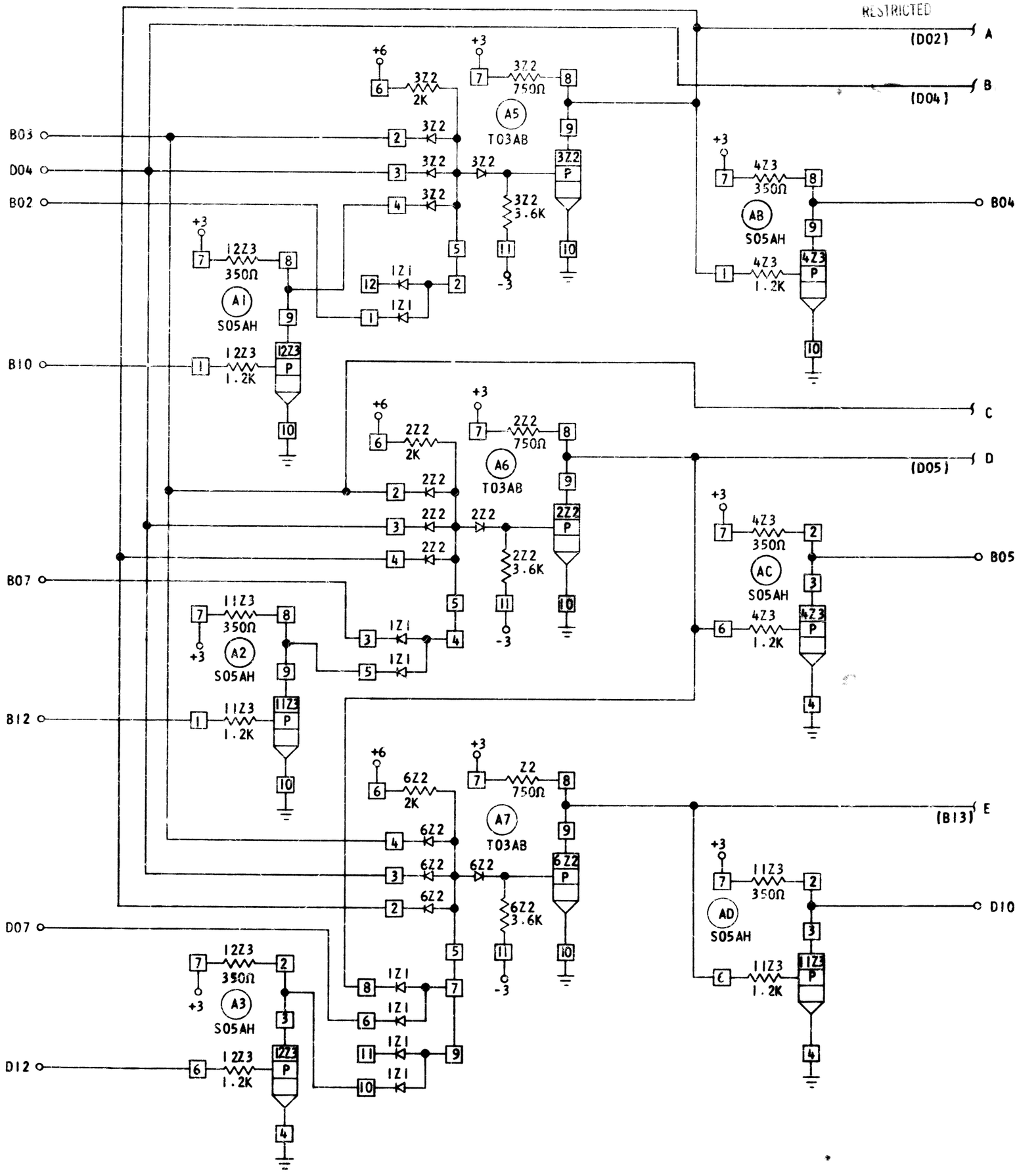

NOTE

NO BUSSING CONDITION

CIRCUIT AND PACKAGING STANDARD	
APPROVAL	DATE

INTERNATIONAL BUSINESS MACHINES CORP.	DATE	CHANGE NO.	APPROVAL	DATE	CHANGE NO.	APPROVAL	DEVELOPMENT NO.
NAME PRIORITY PACK	10-28-64	162127					SE395
	28 FEB 67	169825 B					
DESIGN / MODEL							
DETAIL / SCALE NONE							
CHECK / DRAW							
APPRO / CHECK							

5803827

C