STANDARDS CODE 2-7045

CARD CODE 5803827

SHEET 4 OF 4

RESTRICTED

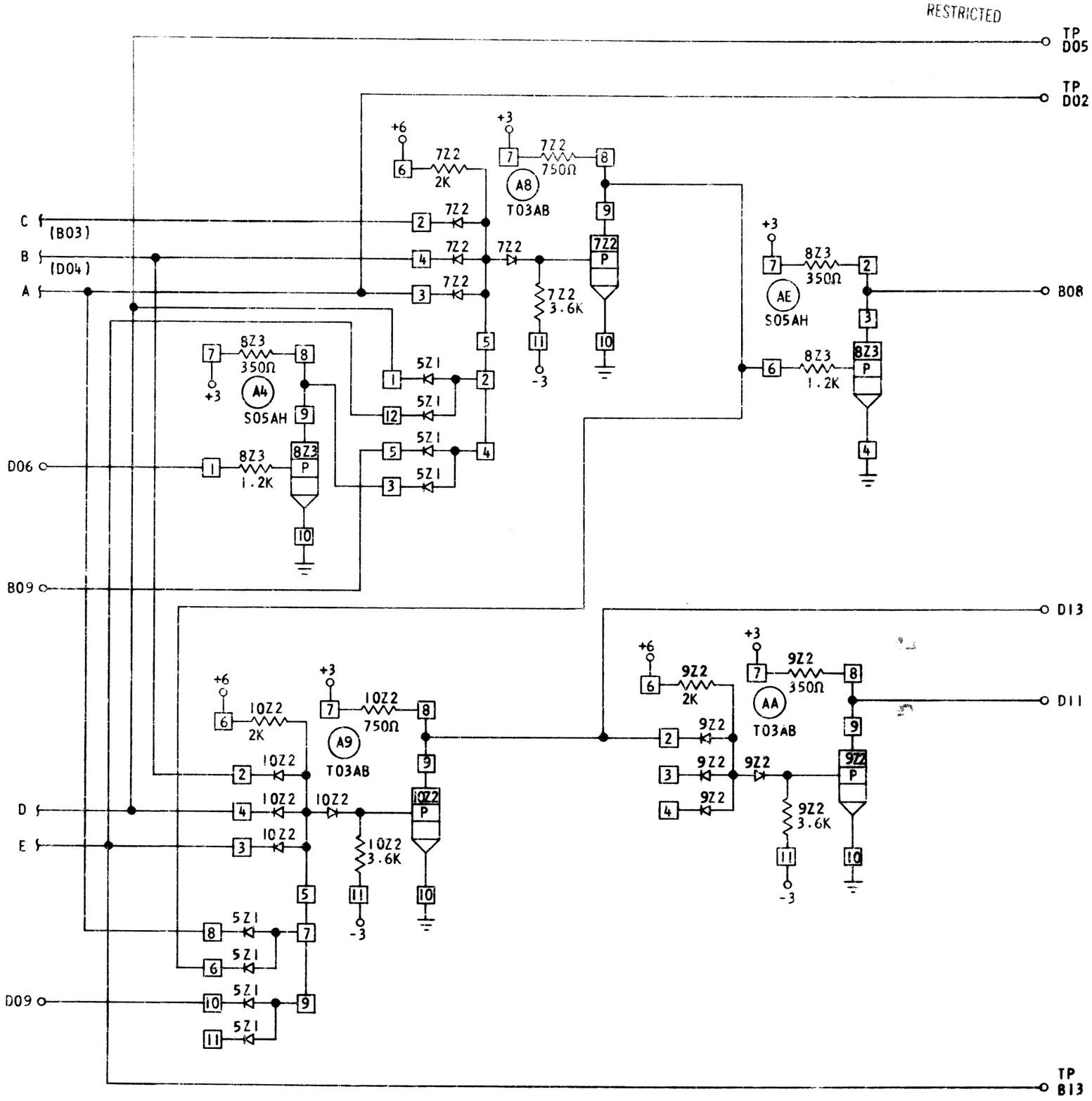

CIRCUIT AND PACKAGING STANDARD	
APPROVAL	DATE

INTERNATIONAL BUSINESS MACHINES CORP.						DATE	CHANGE NO.	APPROVAL	DATE	CHANGE NO.	APPROVAL	DEVELOPMENT NO.	
NAME	PRIORITY PACK					10-28-64	162127					SE395	5803827
						20FEB67	169625 B						
DESIGN	[illegible]	MODEL											
DETAIL	[illegible]	SCALE	NONE										
CHECK	PEH [illegible]	DRAW	[illegible]										
APPRO		CHECK											

C

C.B. CO. NO. 5746 48166