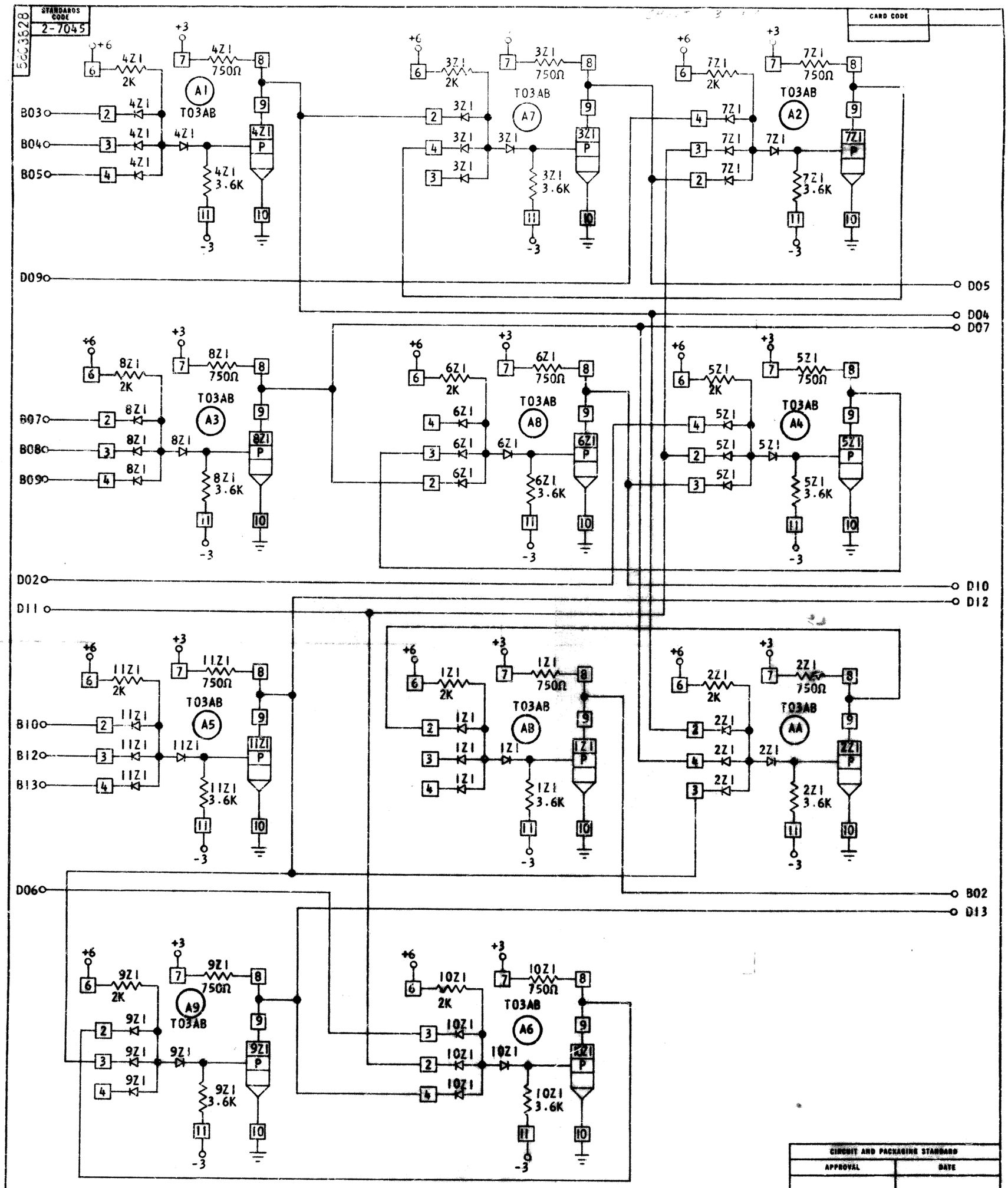

NOTE

NO BUSSING CONDITION

CIRCUIT AND PACKAGING STANDARD	
APPROVAL	DATE

INTERNATIONAL BUSINESS MACHINES CORP.				DATE	CHANGE NO.	APPROVAL	DATE	CHANGE NO.	APPROVAL	DEVELOPMENT NO.	
NAME	3 BIT ERROR REGISTER			10-28-64	162149					SE396	5803828
DESIGN	JMR 11-8-63	MODEL		9FEB67	169846 B						
DETAIL	JMR 11-8-63	SCALE	NONE								
CHECK	PEH 11-21-63	DRAW	MDE 12-13-63								
APPRO		CHECK	TH 12-17-63								

C