CARD CODE 5803864

SHEET 3 OF 3

RESTRICTED

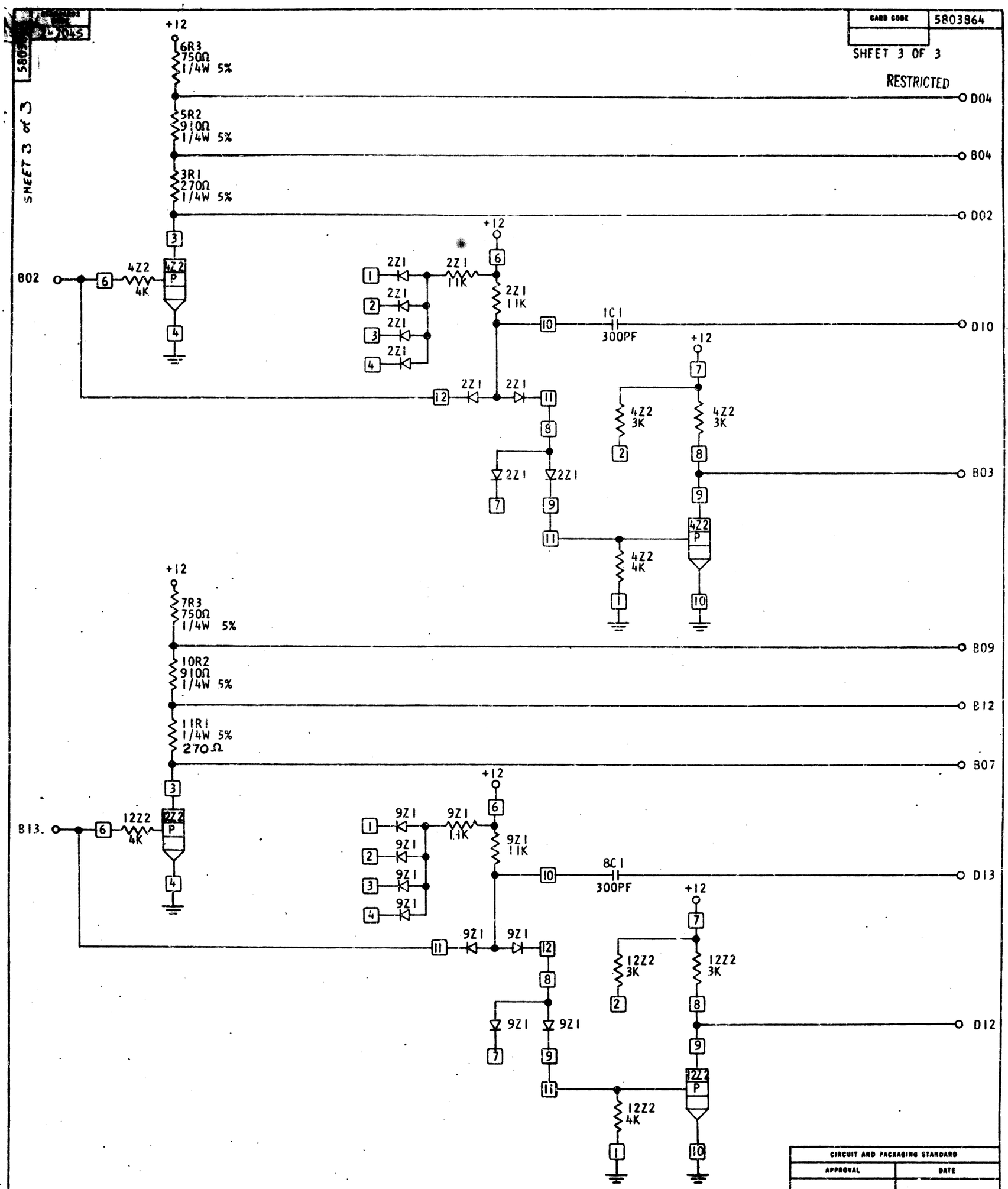


| CIRCUIT AND PACKAGING STANDARD | |
|---|---|
| APPROVAL | DATE |
| | |

| INTERNATIONAL BUSINESS MACHINES CORP. | | | | DATE | CHANGE NO. | APPROVAL | DATE | CHANGE NO. | APPROVAL | DEVELOPMENT NO. |
|---|---|---|---|---|---|---|---|---|---|---|
| NAME 2 DELAY CIRCUITS | | | | 1-26-65 | 163251 | | | | | |
| DESIGN | | MODEL | | | | | | | | |
| DETAIL | | SCALE | NONE | | | | | | | |
| CHECK | | DRAW | VMD 1-28-64 | | | | | | | |
| APPRO | | CHECK | | | | | | | | |

5803864

C