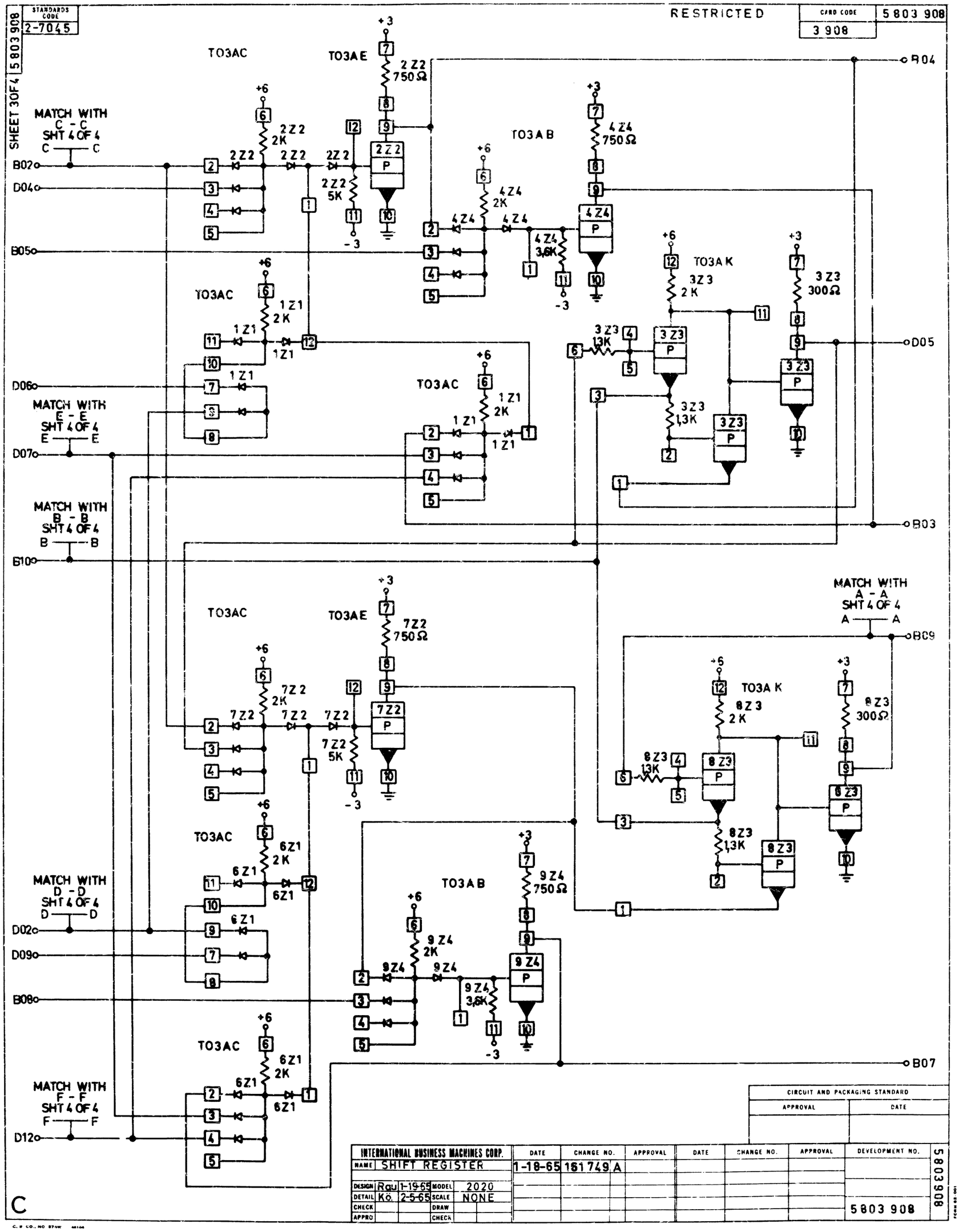
STANDARDS CODE 2-7045
SHEET 3 OF 4 5803908
RESTRICTED
CARD CODE 3908
5803908
TO3AC
TO3AE
TO3AB
TO3AK
MATCH WITH C - C SHT 4 OF 4
MATCH WITH E - E SHT 4 OF 4
MATCH WITH B - B SHT 4 OF 4
MATCH WITH A - A SHT 4 OF 4
MATCH WITH D - D SHT 4 OF 4
MATCH WITH F - F SHT 4 OF 4
B02
D04
B05
D06
D07
B10
D02
D09
B08
D12
B04
D05
B03
B09
B07
2Z2 750Ω
2Z2 2K
2Z2 5K
4Z4 750Ω
4Z4 2K
4Z4 3,6K
3Z3 300Ω
3Z3 2K
3Z3 1,3K
1Z1 2K
7Z2 750Ω
7Z2 2K
7Z2 5K
8Z3 300Ω
8Z3 2K
8Z3 1,3K
6Z1 2K
9Z4 750Ω
9Z4 2K
9Z4 3,6K
CIRCUIT AND PACKAGING STANDARD
APPROVAL
DATE
INTERNATIONAL BUSINESS MACHINES CORP.
NAME SHIFT REGISTER
DESIGN Rau 1-19-65
DETAIL Ko. 2-5-65
CHECK
APPRO
MODEL 2020
SCALE NONE
DRAW
CHECK
DATE 1-18-65
CHANGE NO. 161749 A
DEVELOPMENT NO.
5803908
C