STANDARDS CODE 2-7045

RESTRICTED

CARD CODE 5 803 908 / 3 908

SHEET 4 OF 4 5 803 908

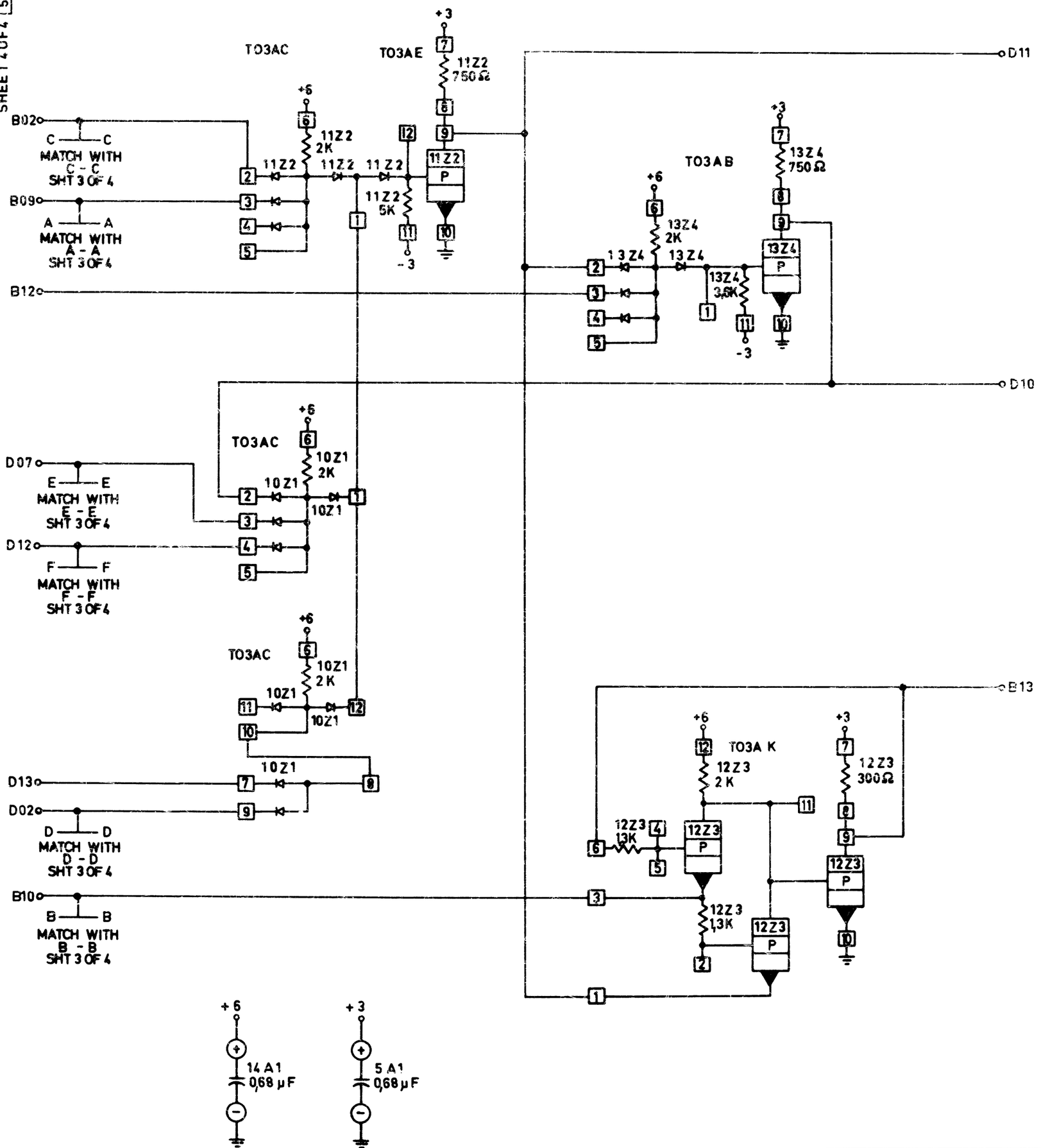

CIRCUIT AND PACKAGING STANDARD	
APPROVAL	DATE

INTERNATIONAL BUSINESS MACHINES CORP.				DATE	CHANGE NO.	APPROVAL	DATE	CHANGE NO.	APPROVAL	DEVELOPMENT NO.	5803 908
NAME	SHIFT REGISTER			1-18-65	161 749 A						
DESIGN	Rau. 1-20-65	MODEL	2020								
DETAIL	Kö. 2-5-65	SCALE	NONE								
CHECK		DRAW								5 803 908	
APPRO		CHECK									

C

C. B. CO., NO 57-W

FORM 23-001