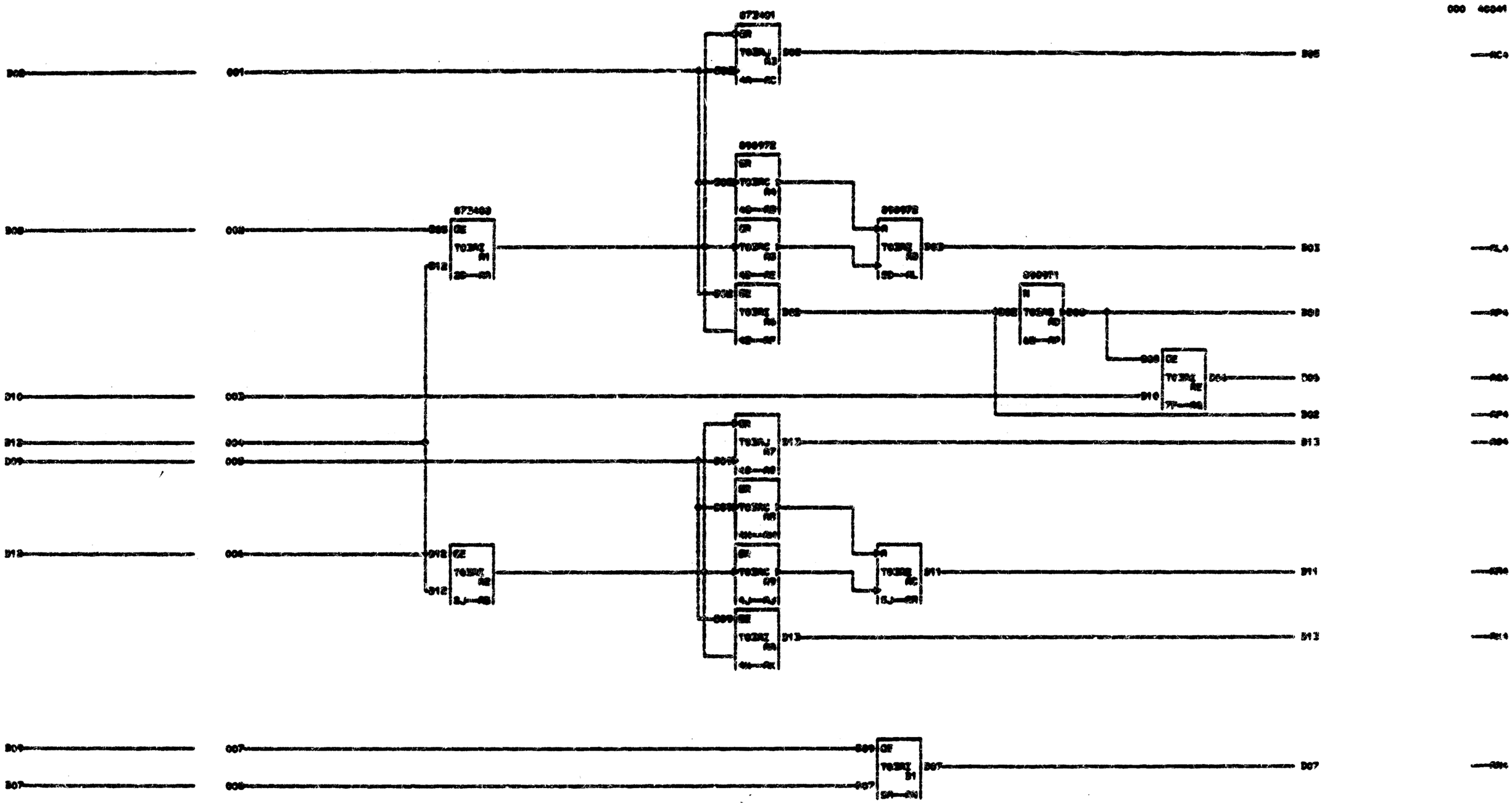

RESTRICTED

CARD [illegible]-V12 PNC T03
VOLTAGE PINS
4 +[illegible] +[illegible]
0 -[illegible] [illegible]
8 STANDARD RESTRICTED
4
1
000

2 BIT HALF ADD CARD
DATE 03-11-64 PROD. ASSEMBLY
LOT 102 PRAMZ
CS PG 1 SP 1 P.N. 03804004
IBM CORP. PD BLK. AR