STANDARDS CODE	CIRCUIT AND PACKAGING STANDARD		SYM	DATE	CHANGE NO.	TECH APPRO	SYM	DATE	CHANGE NO.	TECH APPRO	DEVELOPMENT NO.	6/10
2-7065	APPROVAL	DATE		17-JUL-65	DEV.1522							
CARD CODE				05-15-66	1804 S1							
4004											5804004	

SHEET 4 OF 4

RESTRICTED

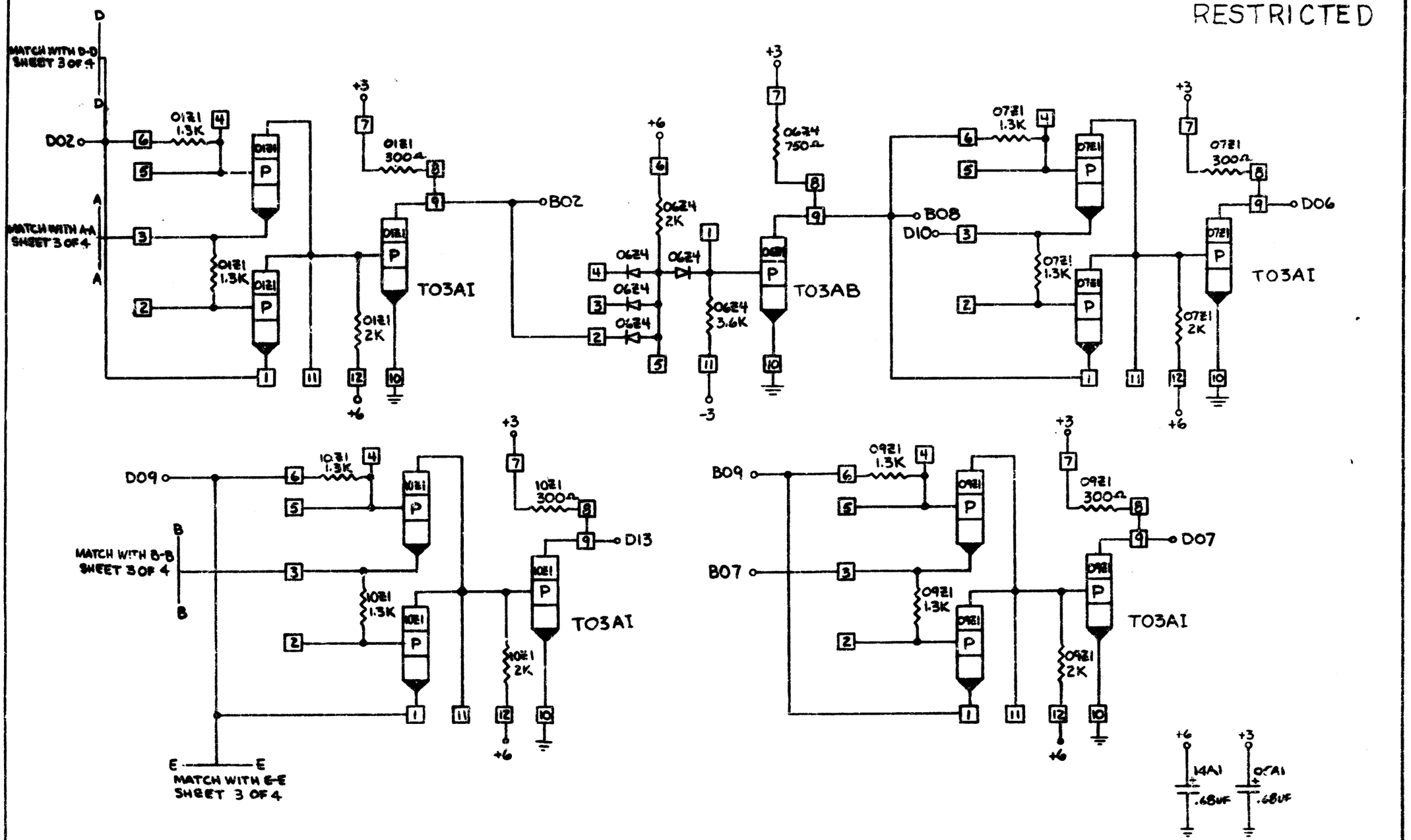

INTERNATIONAL BUSINESS MACHINES CORP				
NAME	CARD ASM - 2 BIT HALF ADD CARD			
DESIGN	CDA	6-27-65	TYPE	2050
DETAIL	CDA	6-27-65	SCALE	NONE
CHECK	DJL	7-8-65	DRAFT	VE 5-5-66
APPRO	WJR	7-15-65	CHECK	DJD 5-5-66

5804004 C