FORM 2-7045-2 (1-63)

STANDARDS CODE	CIRCUIT AND PACKAGING STANDARD		SYM	DATE	CHANGE NO.	TECH APPRO.	SYM	DATE	CHANGE NO.	TECH APPRO.	DEVELOPMENT NO.	0/12
2-7045	APPROVAL	DATE		01-27-64	DEV. 2438							
CARD CODE				05-28-64	160505							
4017				9-29-64	161196						5804017	

SHEET 4 OF 4

RESTRICTED

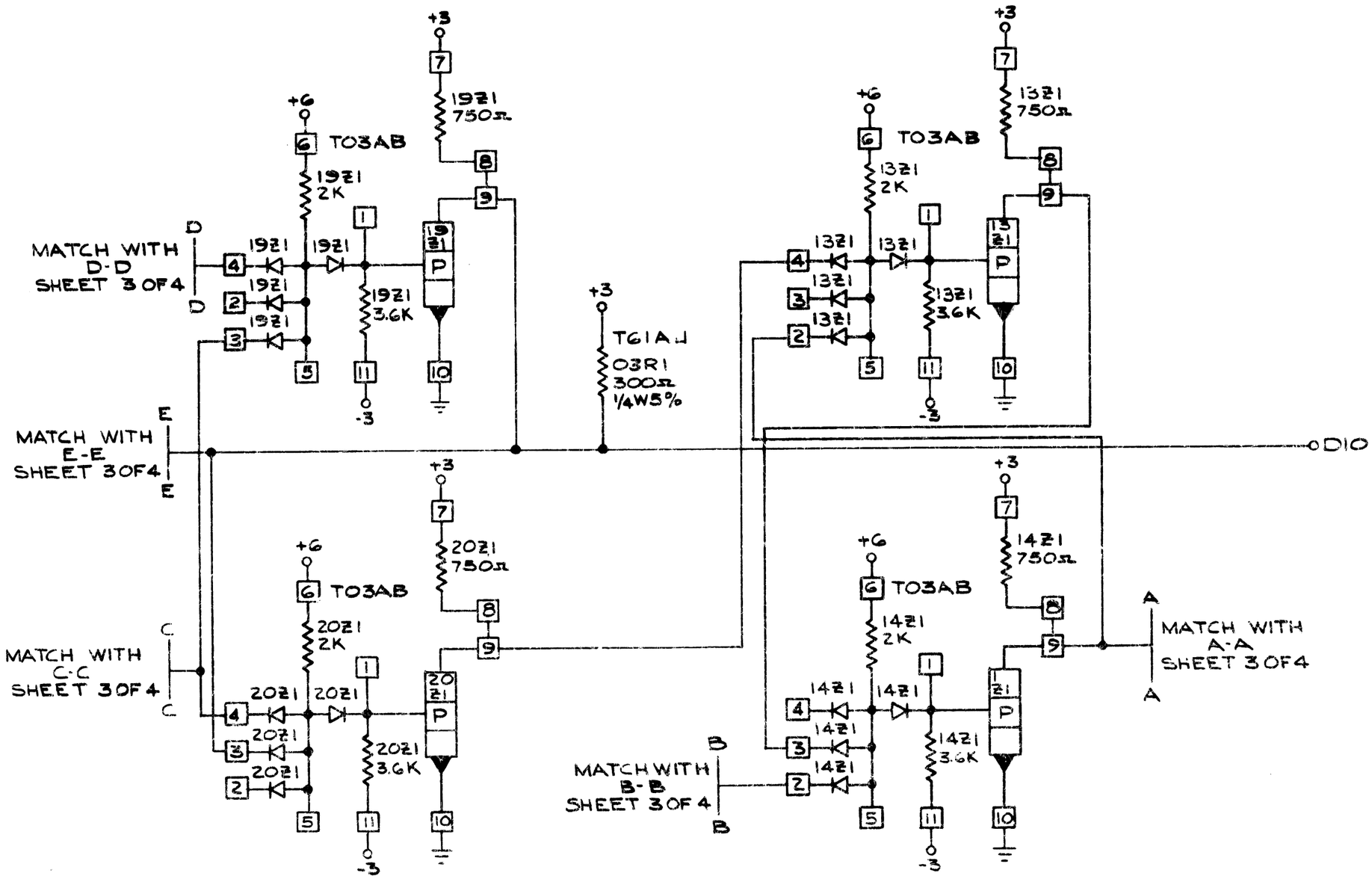

INTERNATIONAL BUSINESS MACHINES CORP				
NAME	CARD ASM-4.0MC			
OSCILLATOR F/2				
DESIGN	CDA	11-8-63	TYPE	2050
DETAIL	CDA	11-8-63	SCALE	NONE
CHECK	CDA	11-4-63	DRAW	W.M. 6-23-64
APPRO	RBS	1-17-64	CHECK	

C 5804017