FORM 2-7045-8 (1-63)

STANDARDS CODE	CIRCUIT AND PACKAGING STANDARD		SYM	DATE	CHANGE NO.	TECH APPRO	SYM	DATE	CHANGE NO.	TECH APPRO	DEVELOPMENT NO.	Q/M
2-7045				6-25-63	DEV. 1292							
CARD CODE	APPROVAL	DATE		10-4-63	DEV. 1669							
4021				4-28-64	DEV. 3056						5804021	
				08-09-64	161164							

SHEET 3 OF 4

RESTRICTED

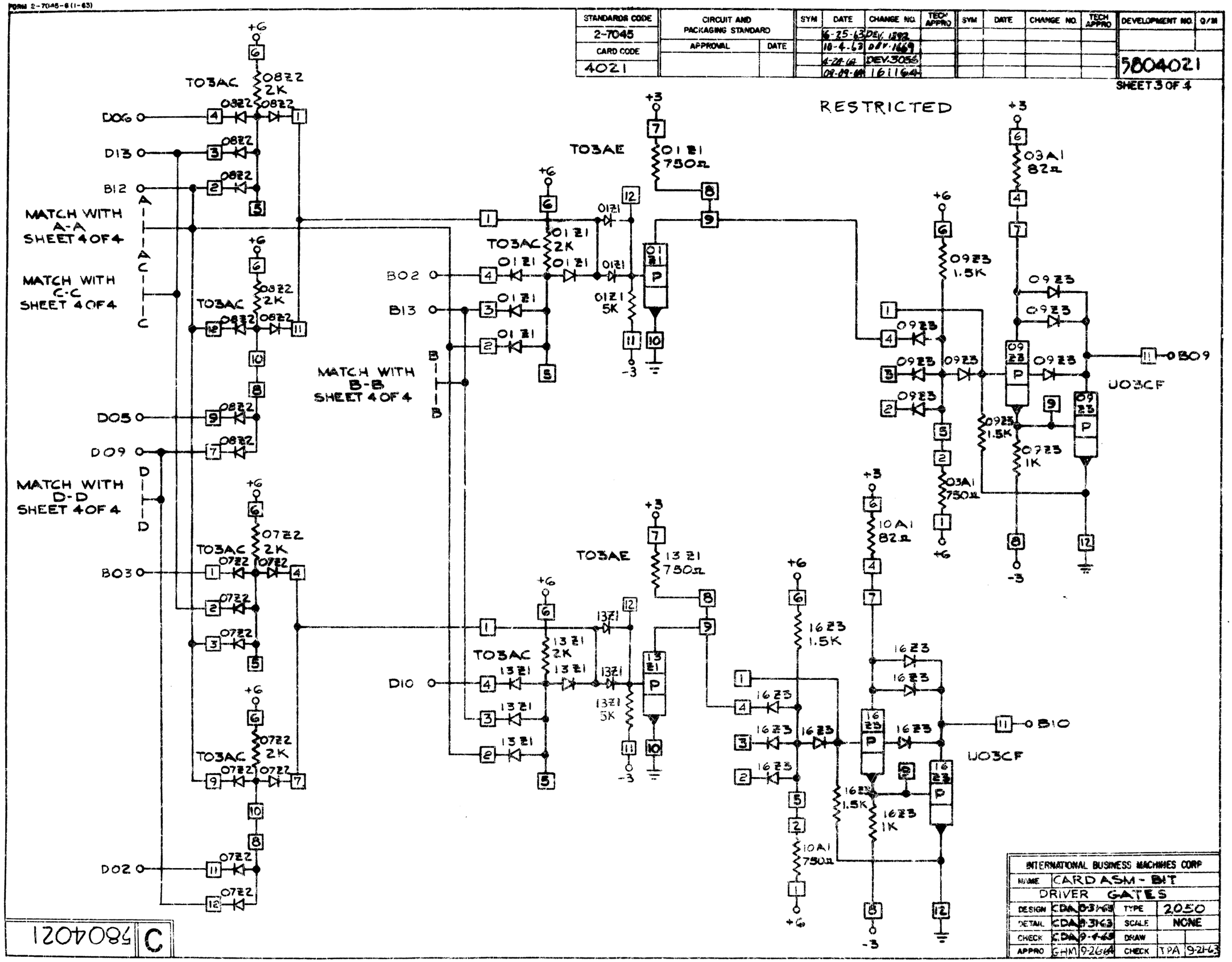

INTERNATIONAL BUSINESS MACHINES CORP				
NAME	CARD ASM - BIT DRIVER GATES			
DESIGN	CDA 8-31-63	TYPE	2050	
DETAIL	CDA 9-3-63	SCALE	NONE	
CHECK	CDA 9-4-63	DRAW		
APPRO	GHM 9-26-63	CHECK	TPA 9-21-63	