FORM 2-7045-6 (1-63)

STANDARDS CODE	CIRCUIT AND PACKAGING STANDARD		SYM	DATE	CHANGE NO.	TECH APPRO	SYM	DATE	CHANGE NO.	TECH APPRO	DEVELOPMENT NO	Q/M
2-7045				12-3-63	DEV 1608							
CARD CODE	APPROVAL	DATE		7-21-64	160582							
				2-23-65	162945						5804024	
4024	G.H.M.	1-29-65		3DEC65	166173	C						
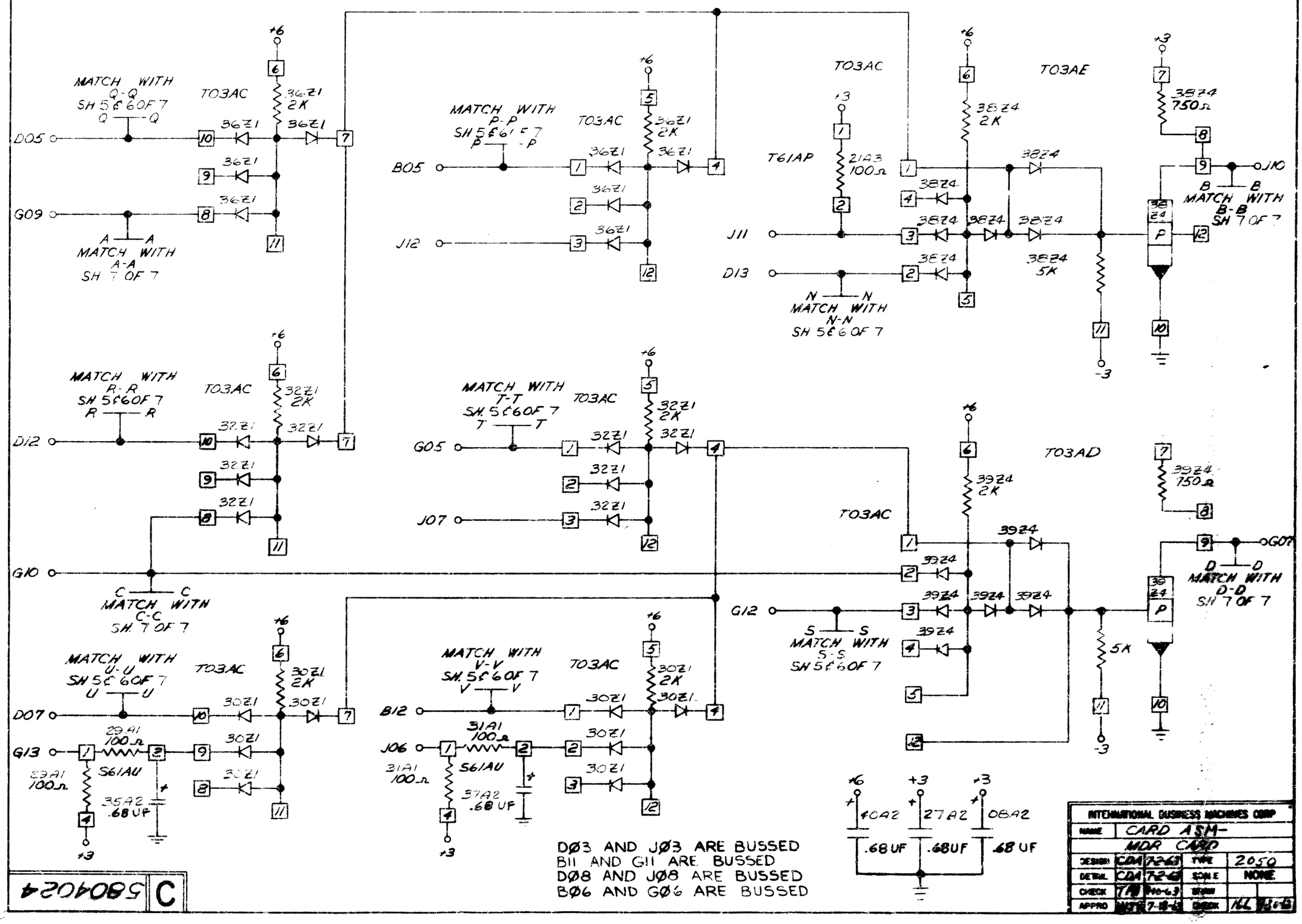
RESTRICTED SHEET 4 OF 7