FORM 2-7045-6 (1-63)

STANDARDS CODE	CIRCUIT AND PACKAGING STANDARD		SYM	DATE	CHANGE NO.	TECH APPRO	SYM	DATE	CHANGE NO.	TECH APPRO	DEVELOPMENT NO.	G/M
2-7045				12-3-63	DEV. 160B							
CARD CODE	APPROVAL	DATE		7-21-64	160582							
4024	G. H. M.	1-29-65		2-23-65	162945						5804024	
				3 DEC 65	166173	C						

RESTRICTED

SHEET 7 OF 7

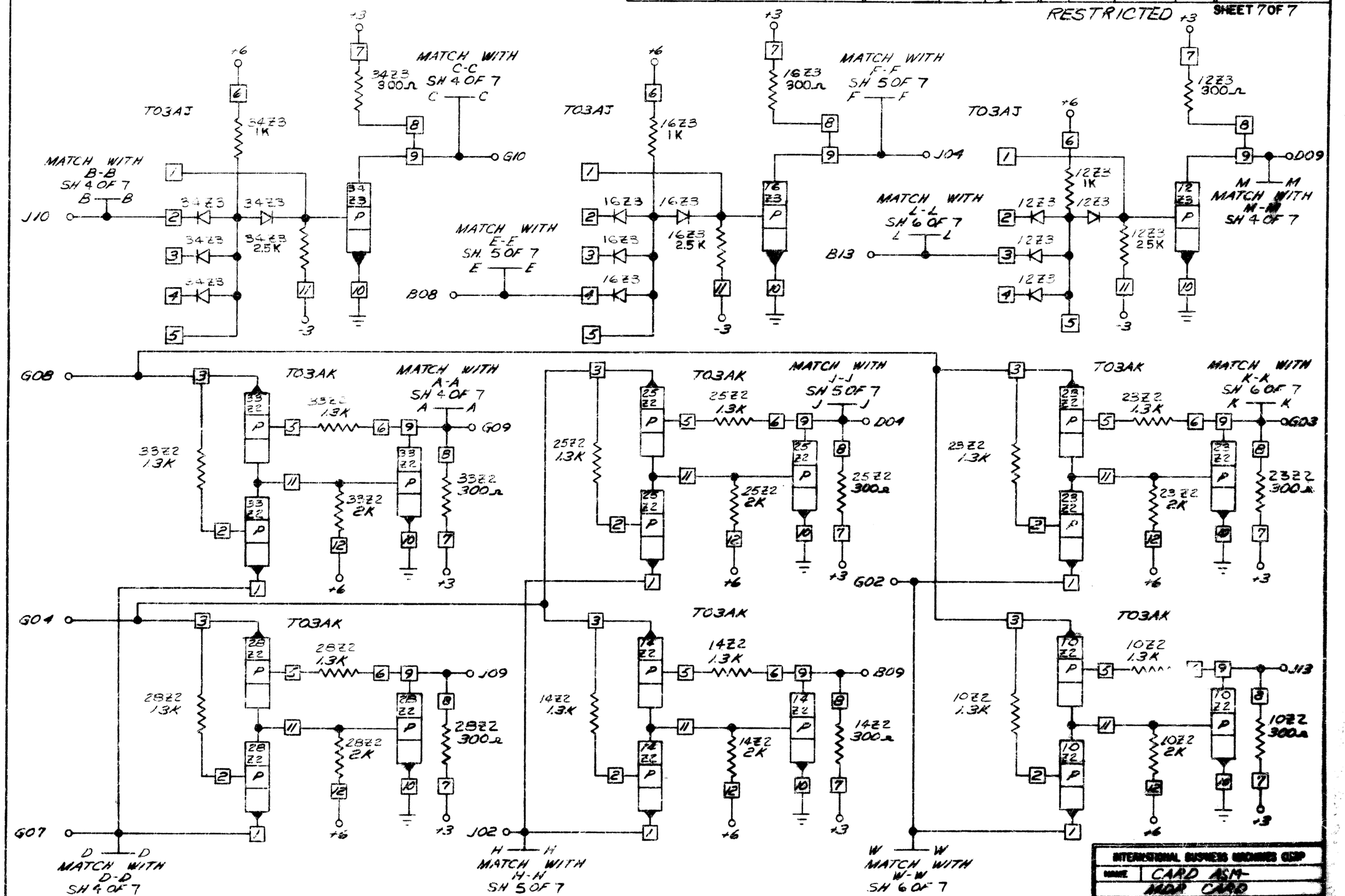

INTERNATIONAL BUSINESS MACHINES CORP				
NAME	CARD ASM- MDP CARD			
DRAWN	CAH 7-2-64	TYPE	2 GSA	
DETAIL	CAH 7-2-64	SCALE	NONE	
CHECK	7-10-64	UNIT		
APPRO	WJ 7-10-64	CHECK		

5804024 C