FORM 2-7045-6 (8-63)

STANDARDS CODE	CIRCUIT AND PACKAGING STANDARD		SYM	DATE	CHANGE NO.	TECH APPRO	SYM	DATE	CHANGE NO.	TECH APPRO	DEVELOPMENT NO.	Q/M
2-7045	APPROVAL	DATE		4-15-64	EV 3045							
CARD CODE				10-4-64	161346						5804029	
4029												

SHEET 3 OF 5

RESTRICTED

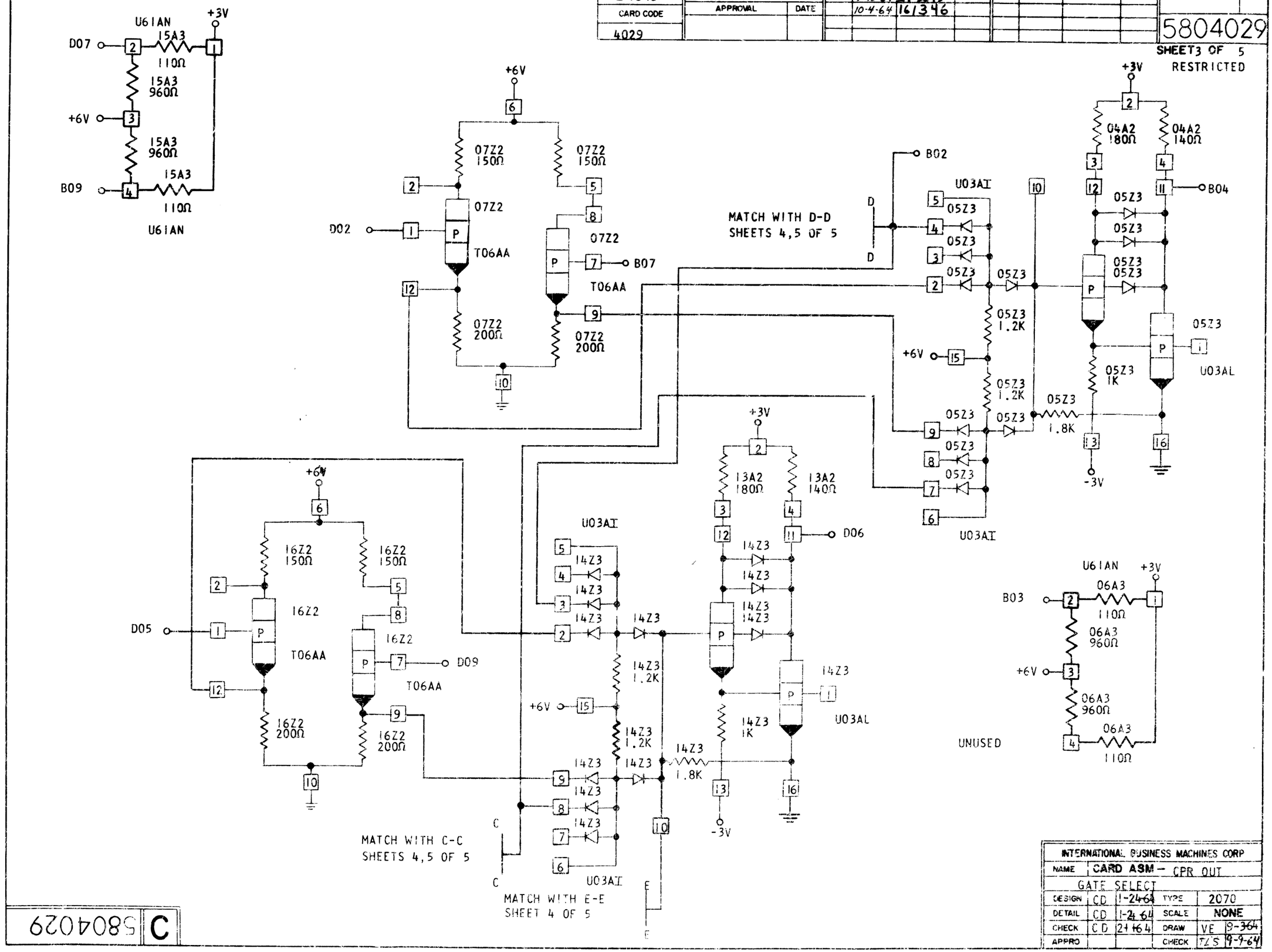
U61AN
+3V
D07
15A3
110Ω
15A3
960Ω
+6V
15A3
960Ω
B09
15A3
110Ω
U61AN
+6V
07Z2
150Ω
07Z2
150Ω
D02
07Z2
T06AA
07Z2
B07
T06AA
07Z2
200Ω
07Z2
200Ω
MATCH WITH D-D
SHEETS 4,5 OF 5
B02
U03AI
05Z3
05Z3
05Z3