STANDARDS CODE	CIRCUIT AND PACKAGING STANDARD		SYM	DATE	CHANGE NO	TECH APPRO	SYM	DATE	CHANGE NO	TECH APPRO	DEVELOPMENT NO	Q/M
2-7045				4-15-64	DEV 3045							
CARD CODE	APPROVAL	DATE		10-4-64	161346							
4029											5804029	

SHEET 4 OF 5

RESTRICTED

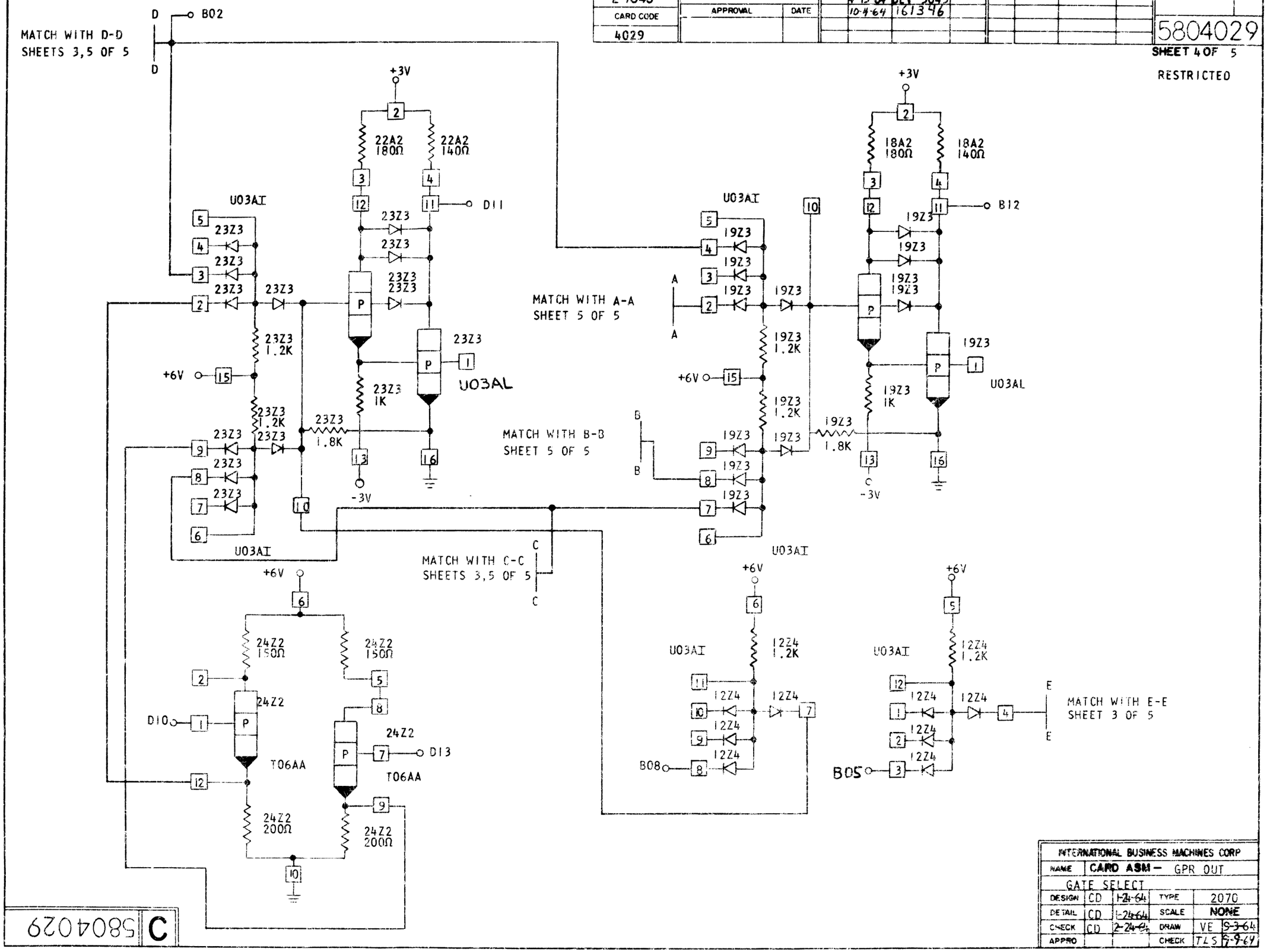

INTERNATIONAL BUSINESS MACHINES CORP				
NAME	CARD ASM — GPR OUT			
GATE SELECT				
DESIGN	CD	1-24-64	TYPE	2070
DETAIL	CD	1-24-64	SCALE	NONE
CHECK	CD	2-24-64	DRAW	VE 9-3-64
APPRO			CHECK	TLS 5-9-69

C 5804029