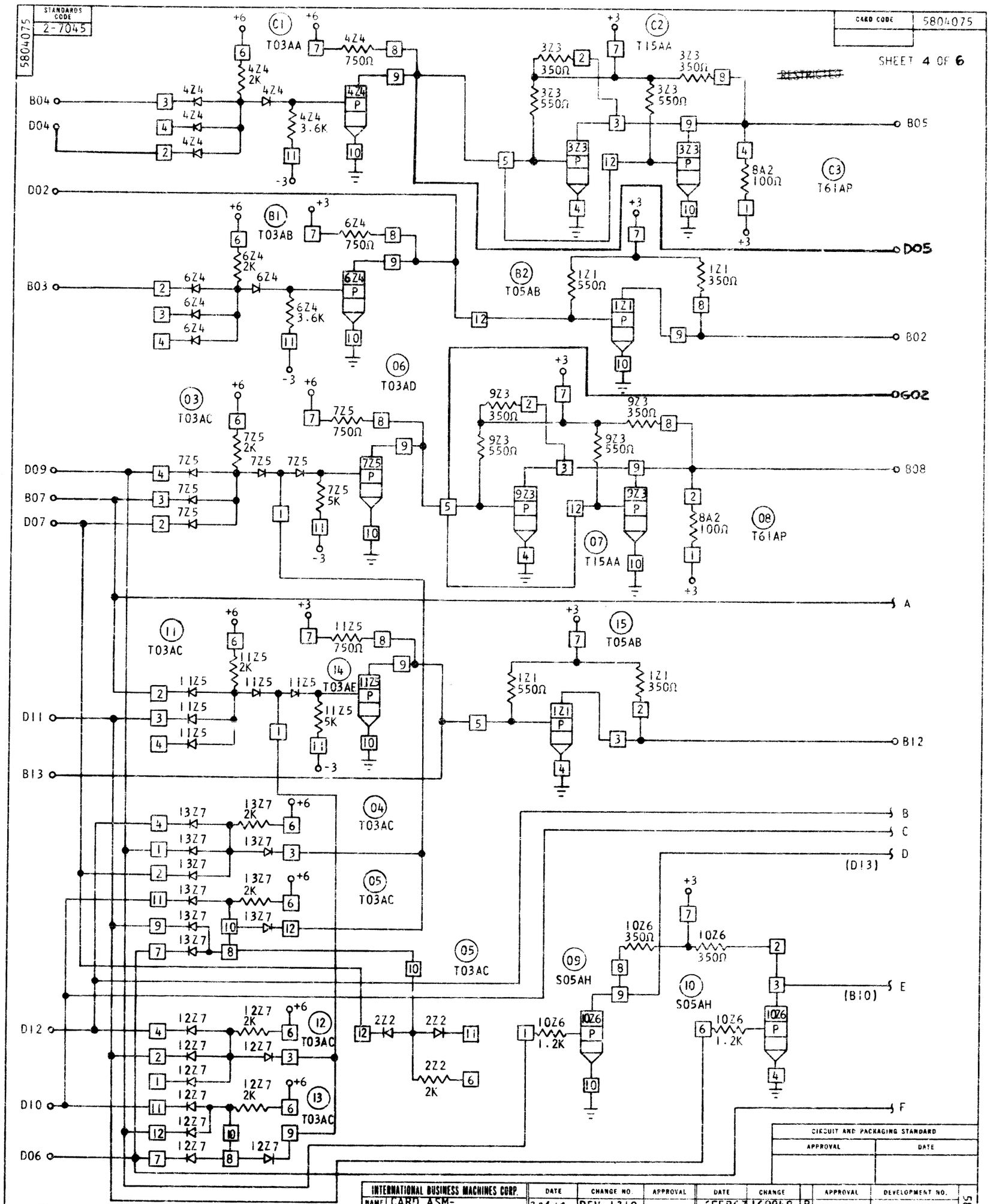
STANDARDS CODE 2-7045
5804075
CARD CODE 5804075
SHEET 4 OF 6
RESTRICTED
C1 T03AA
C2 T15AA
C3 T61AP
B1 T03AB
B2 T05AB
06 T03AD
03 T03AC
07 T15AA
08 T61AP
11 T03AC
14 T03AE
15 T05AB
04 T03AC
05 T03AC
09 S05AH
10 S05AH
12 T03AC
13 T03AC
B04
D04
D02
B03
D09
B07
D07
D11
B13
D12
D10
D06
B05
D05
B02
G02
B08
A
B12
B
C
D
(D13)
E
(B10)
F
NOTE
+3 D03, J03 BUSSED
-3 B06, G06 BUSSED
+6 B11, G11 BUSSED
GND D08, J08 BUSSED
CIRCUIT AND PACKAGING STANDARD
APPROVAL
DATE
INTERNATIONAL BUSINESS MACHINES CORP.
NAME CARD ASM- DECIMAL CORRECTOR
DESIGN
MODEL
DETAIL
SCALE NONE
CHECK CEZ 7-12-63
DRAW VMD 2-24-64
APPRO
CHECK
DATE
CHANGE NO.
APPROVAL
DATE
CHANGE
APPROVAL
DEVELOPMENT NO.
2-24-64 DEV 1310
8-24-64 DEV 2647
4-8-64 DEV 2846
5-6-64 DEV 3082
8-17-64 161281
6FEB67 169848 B
20JUL67 172003 C
5804075