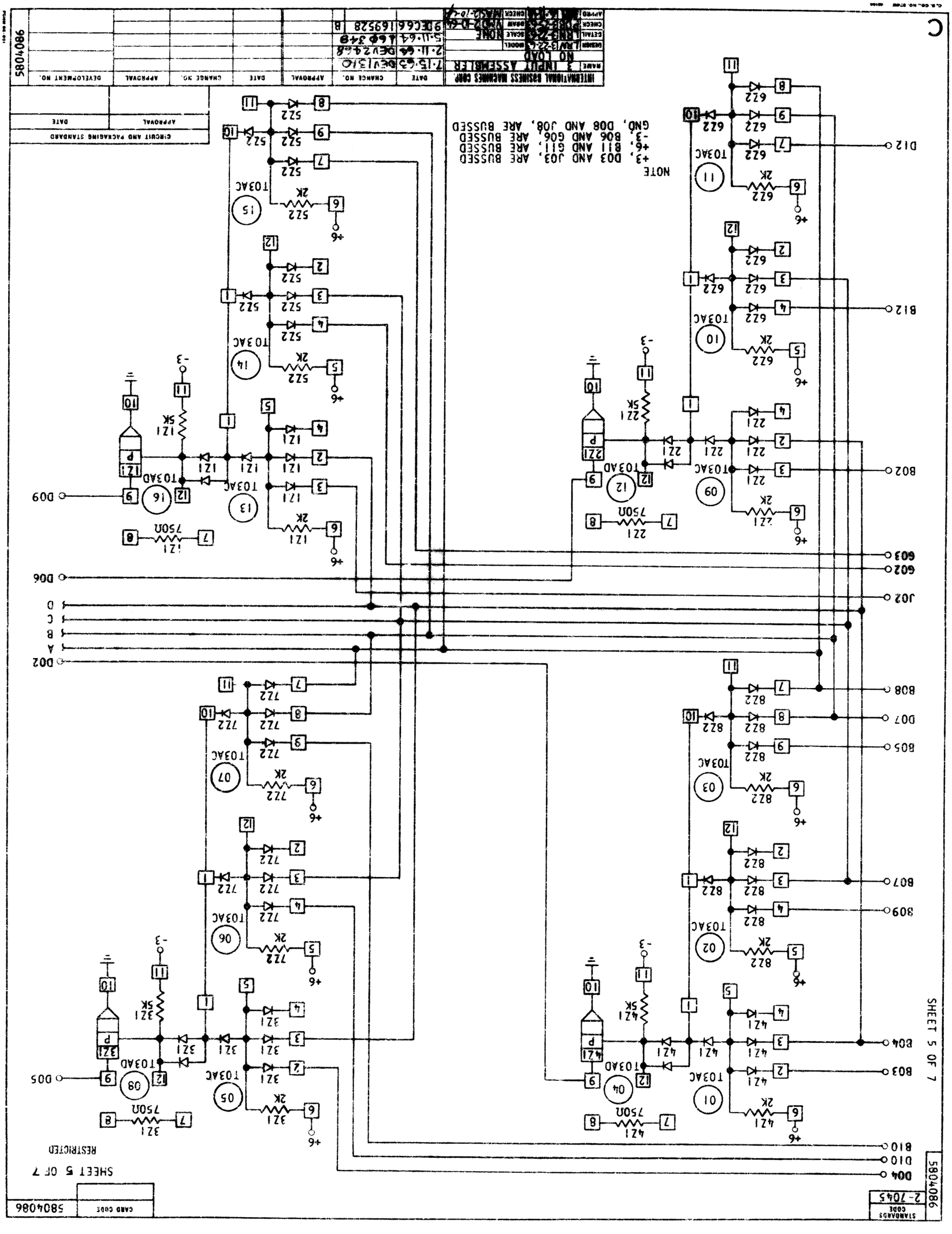
INTERNATIONAL BUSINESS MACHINES CORP.
NAME 3 INPUT ASSEMBLER
NO LOAD
SCALE NONE
5804086
SHEET 5 OF 7
RESTRICTED
CARD CODE
STANDARDS CODE
2-7045
CIRCUIT AND PACKAGING STANDARD
APPROVAL
DATE
CHANGE NO.
DEVELOPMENT NO.
NOTE
+3, D03 AND J03, ARE BUSSED
+6, B11 AND G11, ARE BUSSED
-3, B06 AND G06, ARE BUSSED
GND, D08 AND J08, ARE BUSSED
D12
B12
B02
G03
G02
J02
B08
D07
B05
B07
B09
B04
B03
B10
D10
D04
D02
A
B
C
D
D06
D09
D05
+6
-3
TO3AC
TO3AD
2K
750Ω
22Ω
5K
P
01
02
03
04
05
06
07
08
09
10
11
12
13
14
15
16