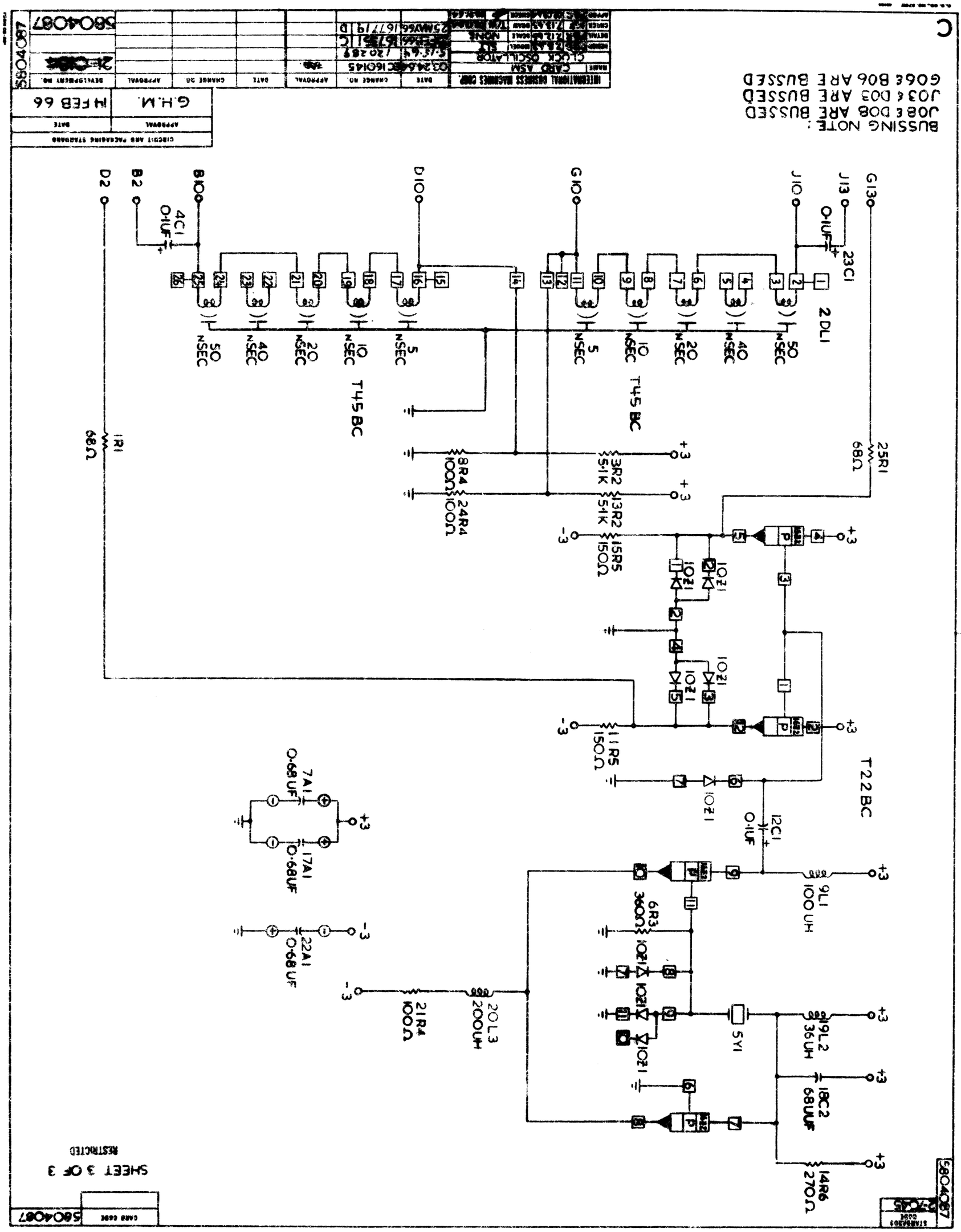
BUSSING NOTE:
J08 & D08 ARE BUSSED
J03 & D03 ARE BUSSED
G06 & B06 ARE BUSSED
INTERNATIONAL BUSINESS MACHINES CORP.
CARD ASM
CLOCK OSCILLATOR
CIRCUIT AND PACKAGING STANDARD
G.H.M.
M FEB 66
T22BC
T45BC
T45BC
2DL1
23C1
0-1UF
G13
J13
J10
G10
D10
B10
B2
D2
4C1
0-1UF
25R1
68Ω
1R1
68Ω
50 NSEC
40 NSEC
20 NSEC
10 NSEC
5 NSEC
3R2
5-1K
13R2
5-1K
15R5
150Ω
8R4
100Ω
24R4
100Ω
11R5
150Ω
12C1
0-1UF
9L1
100 UH
6R3
360Ω
5Y1
19L2
36UH
18C2
68UUF
14R6
270Ω
20L3
200UH
21R4
100Ω
7A1
0-68UF
17A1
0-68UF
22A1
0-68UF
SHEET 3 OF 3
RESTRICTED
580408 7