5804094

STANDARDS CODE 2-7045

CARD CODE 5804094

RESTRICTED

SHEET 6 OF 6

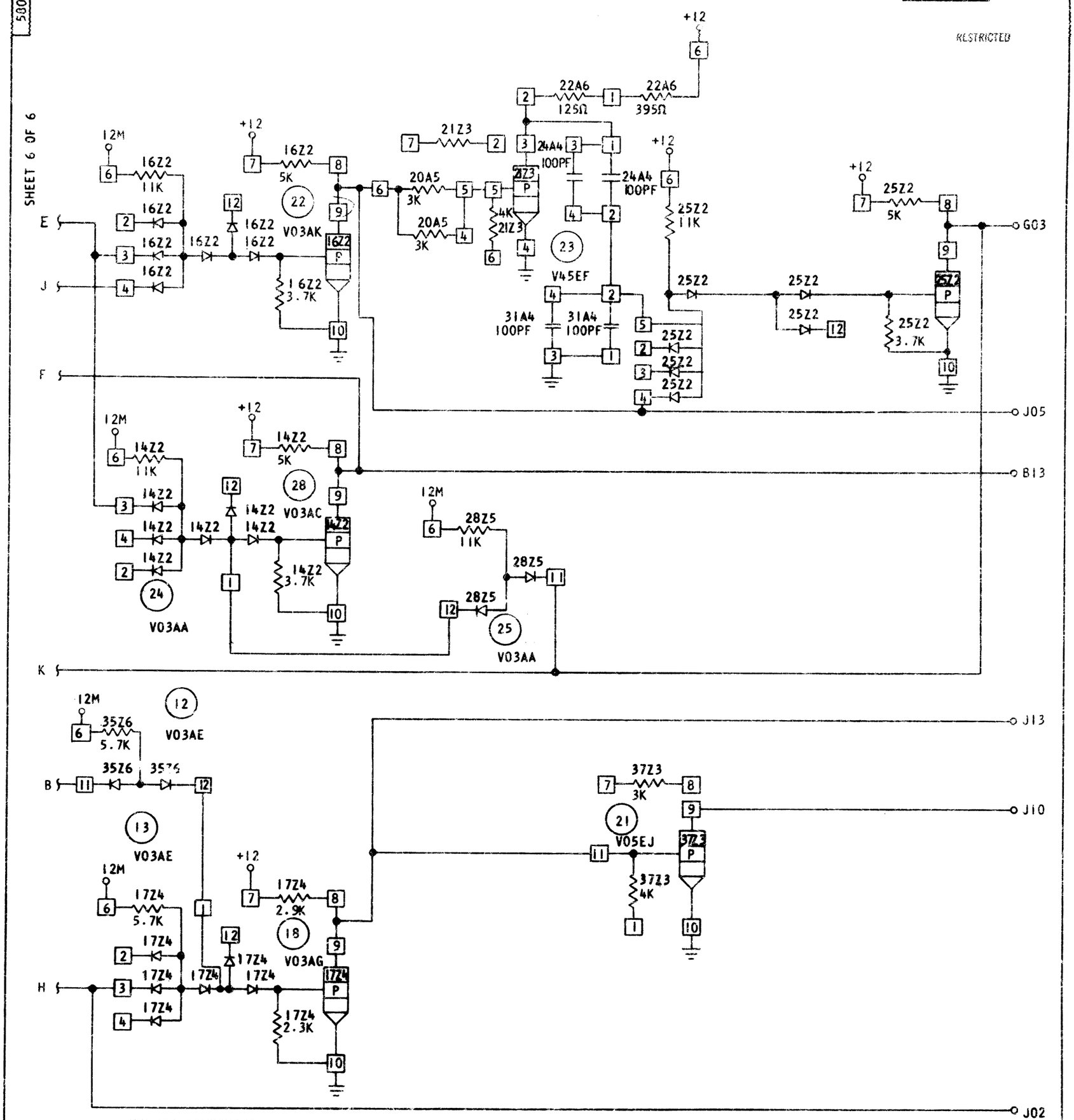

UNUSED COMPONENTS

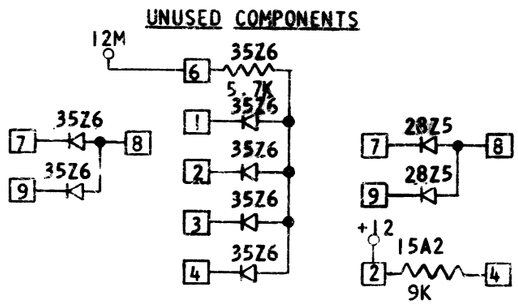

CIRCUIT AND PACKAGING STANDARD	
APPROVAL	DATE

INTERNATIONAL BUSINESS MACHINES CORP.				DATE	CHANGE NO.		APPROVAL	DATE	CHANGE NO.	APPROVAL	DEVELOPMENT NO.
NAME	TAG DELAYS AND SAMPLES			4-7-64	160008	A					
				5-15-64	160564	B					
DESIGN	JMR 12-12-63	MODEL		5-27-64	160713	C					
DETAIL	[redacted]	SCALE	NONE	8-4-64	161211	D					
CHECK	[redacted]	DRAW	NHB 12-5-64	2JUN66	168260	E					
APPRO	[redacted]	CHECK	GSK 12-6-64								

5804094

C

C.B. CO., NO. 9769 4G164

FORM 88 901