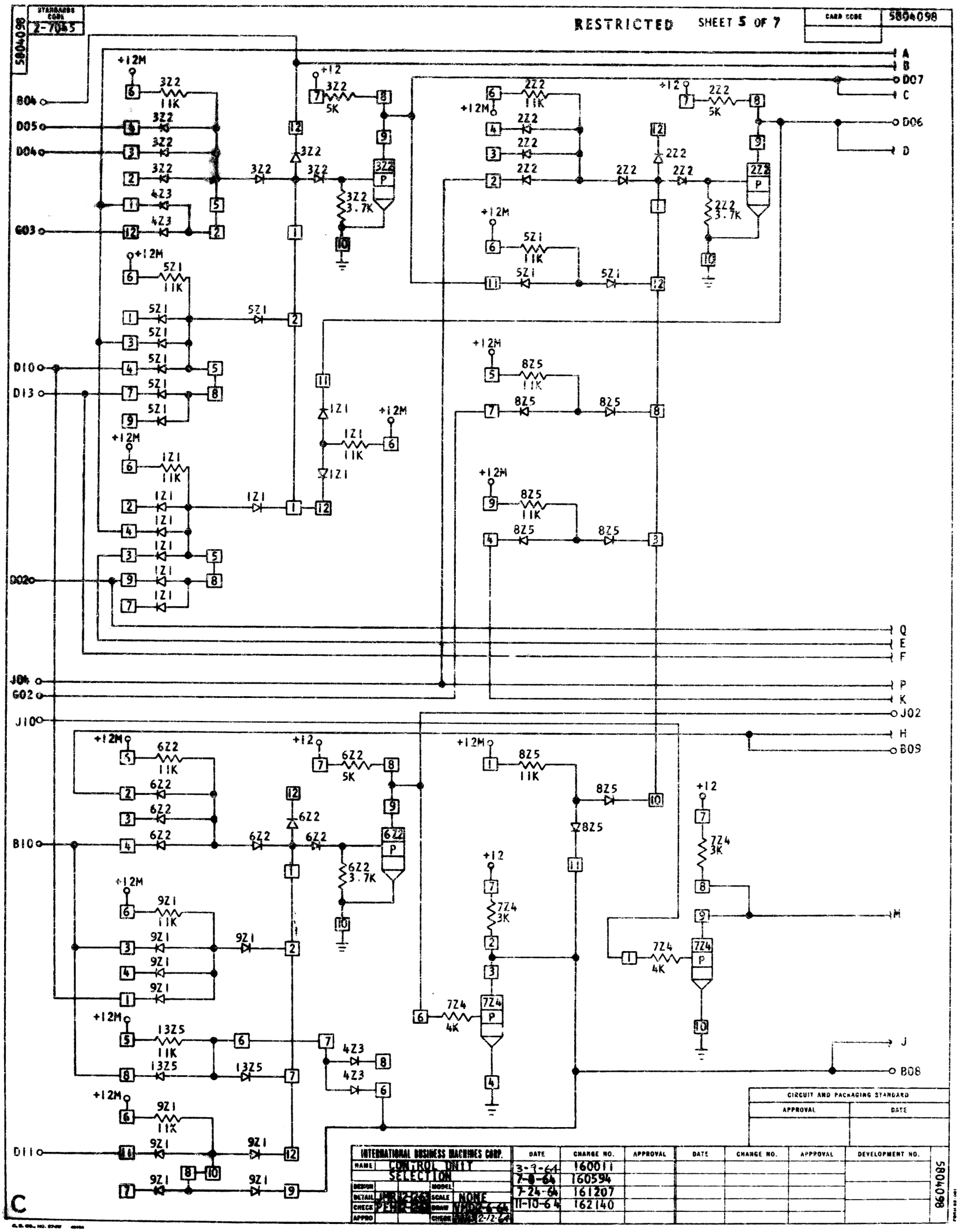
STANDARDS CODE 2-7045
5804098
RESTRICTED
SHEET 5 OF 7
CARD CODE 5804098
B04
D05
D04
G03
D10
D13
D02
J04
G02
J10
B10
D11
A
B
D07
C
D06
D
Q
E
F
P
K
J02
H
B09
M
J
B08
+12M
+12
3Z2 11K
3Z2 5K
3Z2 3.7K
4Z3
5Z1 11K
1Z1 11K
2Z2 11K
2Z2 5K
2Z2 3.7K
8Z5 11K
6Z2 11K
6Z2 5K
6Z2 3.7K
9Z1 11K
13Z5 11K
7Z4 3K
7Z4 4K
CIRCUIT AND PACKAGING STANDARD
APPROVAL
DATE
INTERNATIONAL BUSINESS MACHINES CORP.
NAME CONTROL UNIT SELECTION
DESIGN
DETAIL
CHECK
APPRO
MODEL
SCALE NONE
DRAW
CHECK
DATE
CHANGE NO.
APPROVAL
DEVELOPMENT NO.
3-9-64 160011
7-8-64 160594
7-24-64 161207
11-10-64 162140
5804098
C