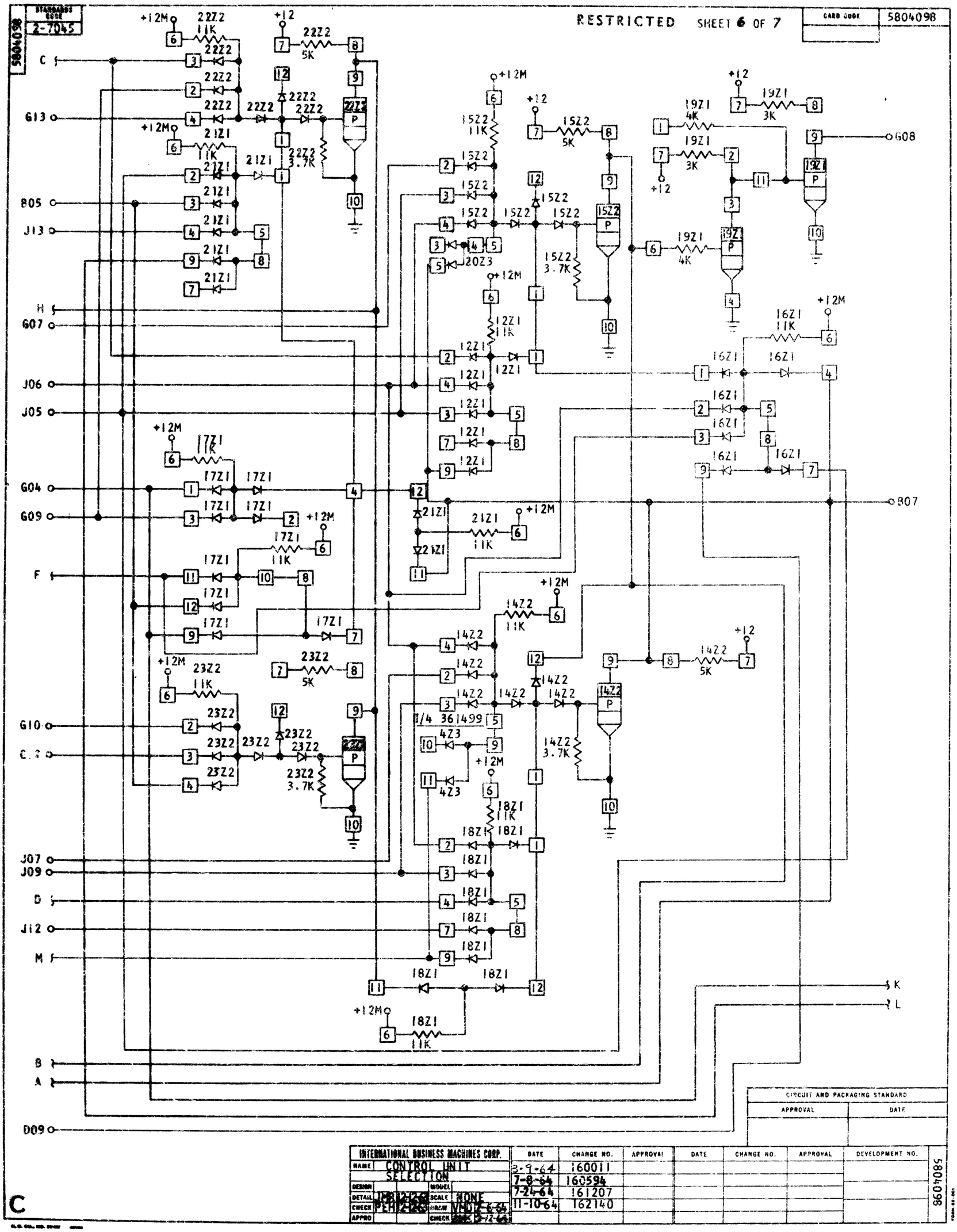
STANDARDS CODE 2-7045
5804098
RESTRICTED SHEET 6 OF 7
CARD CODE 5804098
C
G13
B05
J13
H
G07
J06
J05
G04
G09
F
G10
C.2
J07
J09
D
J12
M
B
A
D09
G08
B07
K
L
+12M
+12
22Z2
11K
5K
3.7K
21Z1
15Z2
20Z3
19Z1
4K
3K
12Z1
16Z1
17Z1
14Z2
23Z2
1/4 361499
4Z3
18Z1
CIRCUIT AND PACKAGING STANDARD
APPROVAL
DATE
INTERNATIONAL BUSINESS MACHINES CORP.
NAME CONTROL UNIT SELECTION
DESIGN
DETAIL JMB 12-2-64
CHECK PEH 12-2-64
APPRO
MODEL
SCALE NONE
DRAW VMD 12-6-64
CHECK 12-7-64
DATE
CHANGE NO.
APPROVAL
DEVELOPMENT NO.
3-9-64 160011
7-8-64 160594
7-24-64 161207
11-10-64 162140
5804098