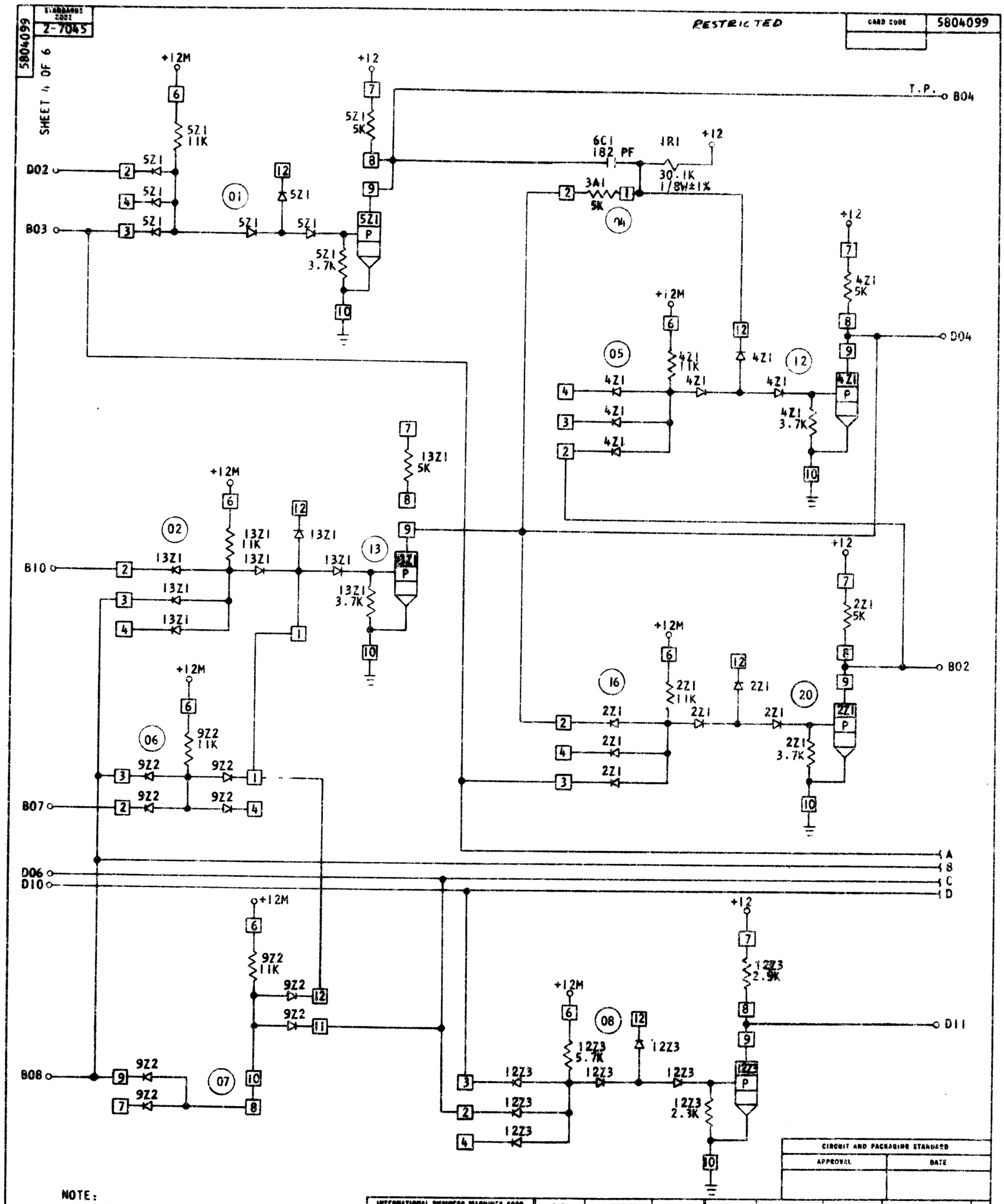
5804099
SHEET 4 OF 6
STANDARDS CODE
Z-7045
RESTRICTED
CARD CODE
5804099
+12M
+12
T.P.
B04
D02
B03
5Z1 11K
5Z1 5K
5Z1 3.7K
6C1 182 PF
1R1 30.1K 1/8W±1%
3A1 5K
01
04
+12M
+12
4Z1 5K
4Z1 11K
4Z1 3.7K
05
12
D04
13Z1 5K
13Z1 11K
13Z1 3.7K
02
13
B10
+12M
+12
2Z1 5K
2Z1 11K
2Z1 3.7K
16
20
B02
+12M
9Z2 11K
06
B07
D06
D10
A
B
C
D
+12M
9Z2 11K
07
B08
+12M
12Z3 5.7K
08
+12
12Z3 2.9K
12Z3 2.3K
D11
NOTE:
NO BUSSING CONDITION EXISTS
C
CIRCUIT AND PACKAGING STANDARD
APPROVAL
DATE
INTERNATIONAL BUSINESS MACHINES CORP.
NAME NPL INTERFACE TAG LINE REGISTER
DESIGN
DETAIL
CHECK
APPRO
MODEL
SCALE NONE
DRAW
CHECK
DATE
CHANGE NO.
APPROVAL
3-18-64 160012
5-21-64 160701
8-28-64 161503
164856 D
9AUG65 165300 E
9MAY66 168178 F
DEVELOPMENT NO.
5804099