5804099

STANDARDS CODE 2-7045

RESTRICTED

CARD CODE 5804099

SHEET 5 OF 6

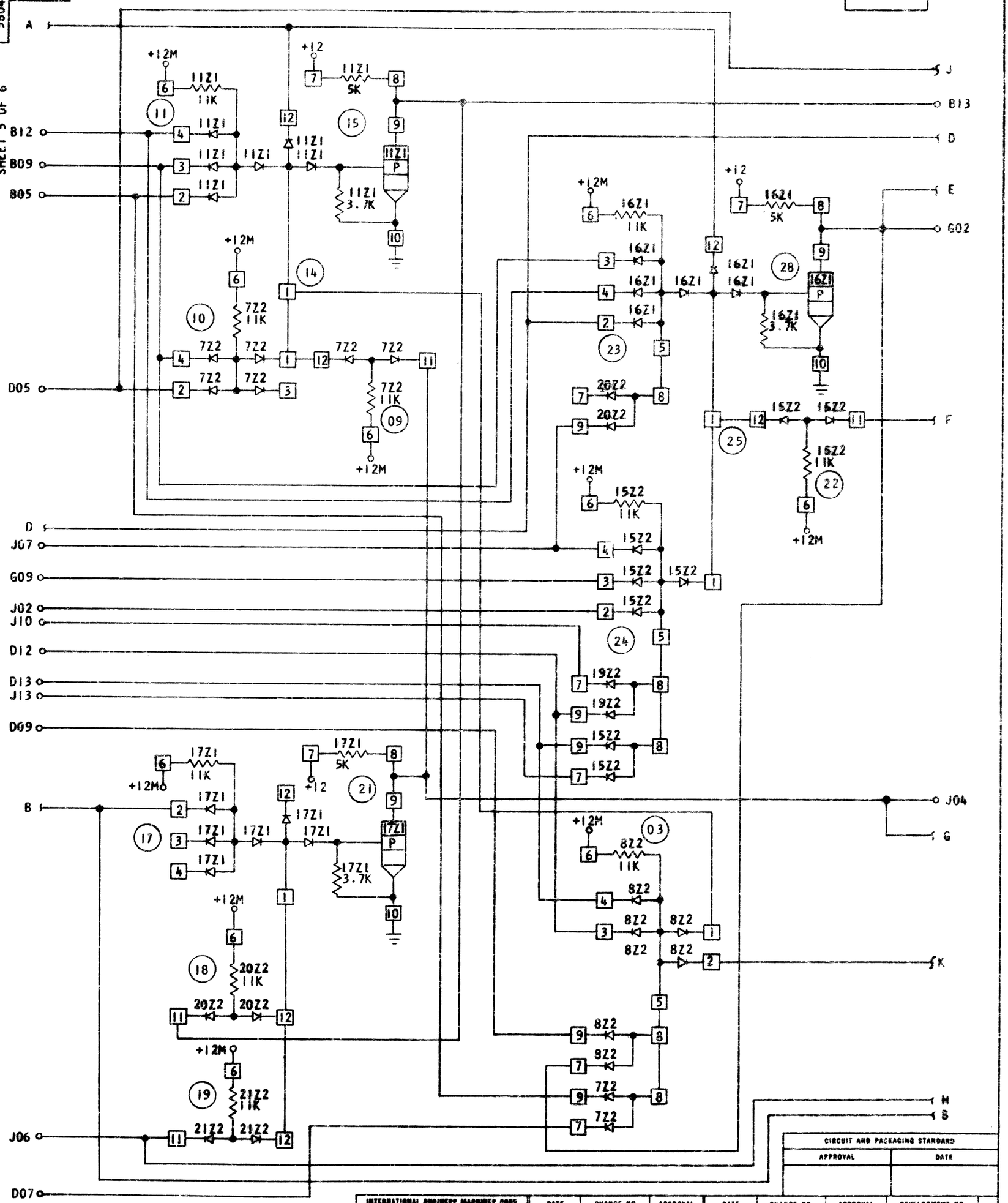

CIRCUIT AND PACKAGING STANDARD	
APPROVAL	DATE

INTERNATIONAL BUSINESS MACHINES CORP.				DATE	CHANGE NO.	APPROVAL	DATE	CHANGE NO.	APPROVAL	DEVELOPMENT NO.
NAME	NPI INTERFACE TAG LINE REGISTER			3-18-64	160012		9MAY66	168178 F		
DESIGN	JMR 12-12-63	MODEL		5-21-64	160701					
DETAIL	JMR 12-12-63	SCALE	NONE	8-28-64	161503					
CHK OR	PEH 12-12-63	DRAW	VHO 12-5-64		164856 D					
APPRO		CHECK	ESK 12-5-64	9 AUG65	165300 E					

5804099