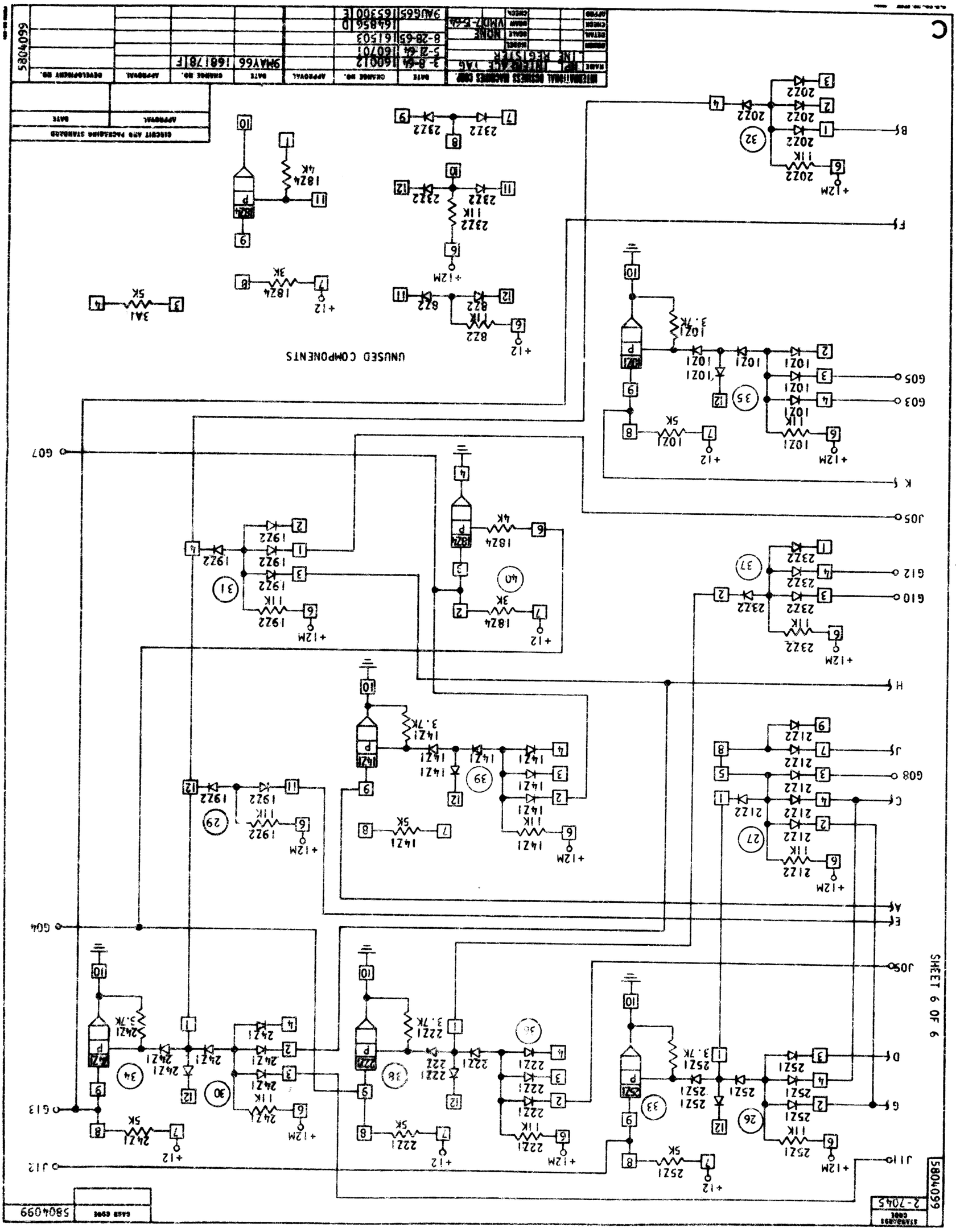
MITSUBISHI ELECTRIC TAS
LINE REGULATOR
UNUSED COMPONENTS
SHEET 6 OF 6
5804099