STANDARDS CODE	CIRCUIT AND PACKAGING STANDARD		SYM	DATE	CHANGE NO	TECH APPRO	SYM	DATE	CHANGE NO	TECH APPRO	DEVELOPMENT NO	G/M
2-7045				5-8-64	DEV 3209							
CARD CODE	APPROVAL	DATE		7-29-64	160832						5804107	
4107												

RESTRICTED

SHEET 6 OF 8

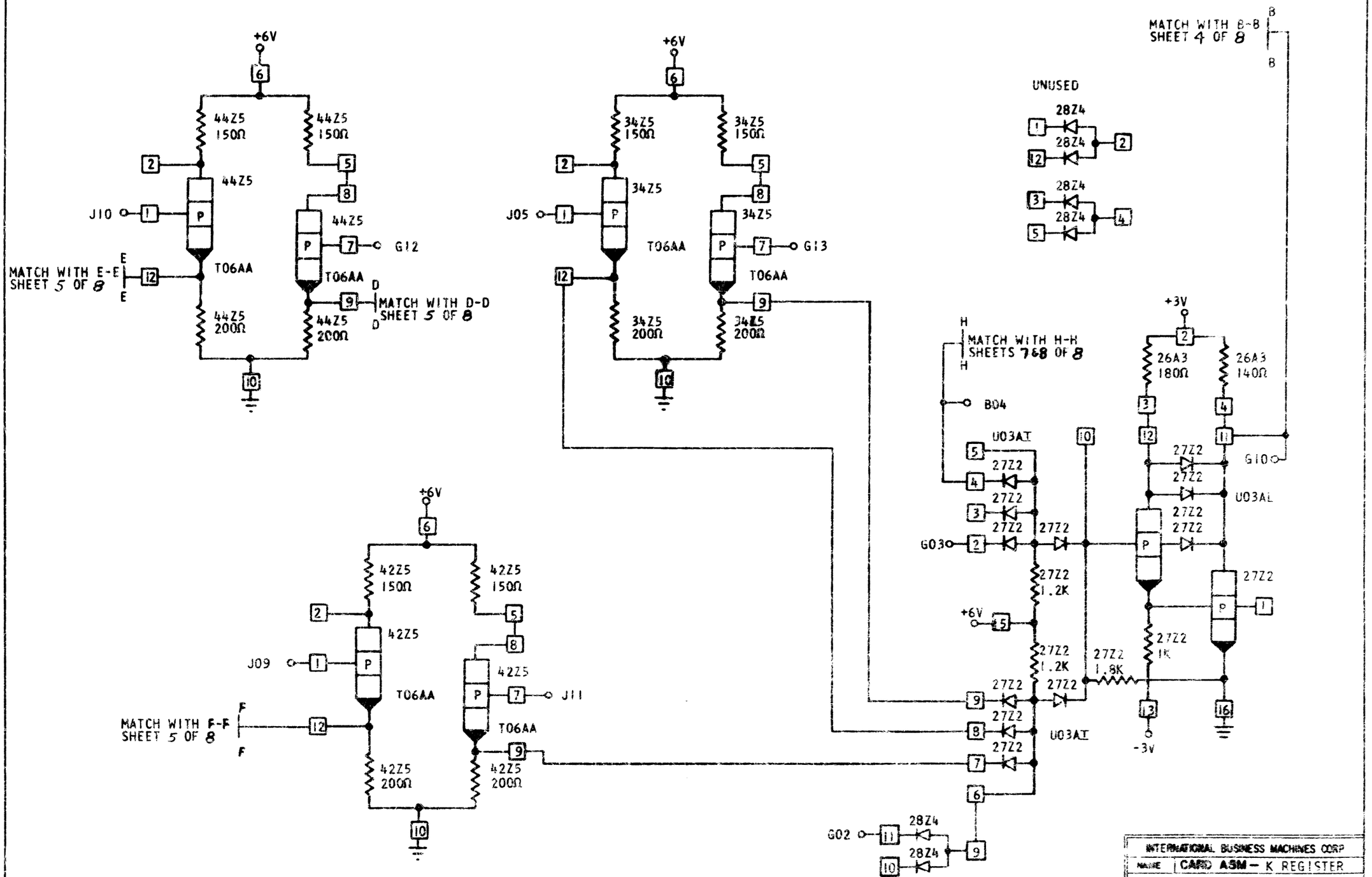

INTERNATIONAL BUSINESS MACHINES CORP				
NAME	CARD ASM – K REGISTER			
DESIGN	CDA	7-11-63	TYPE	2070
DETAIL	CDA	7-11-63	SCALE	NONE
CHECK	CDA	7-30-63	DRAW	VE 8-11-64
APPRO			CHECK	DLN 8-17-64

C 5804107