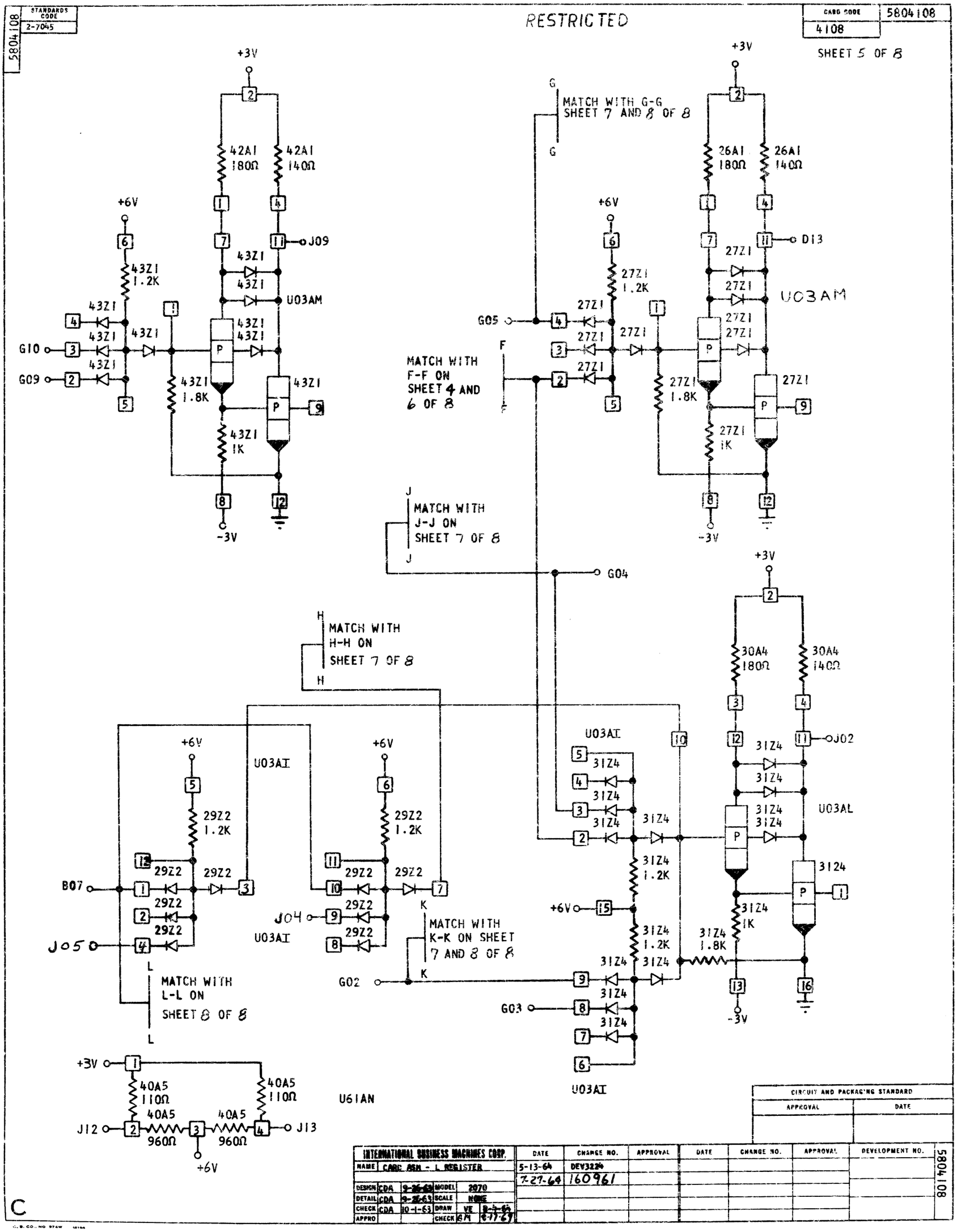

CIRCUIT AND PACKAGING STANDARD

APPROVAL	DATE

INTERNATIONAL BUSINESS MACHINES CORP.																			
NAME	CARD ASM - L REGISTER																		
DESIGN	CDA	9-26-63	MODEL	2070															
DETAIL	CDA	9-26-63	SCALE	NONE															
CHECK	CDA	10-1-63	DRAW	VE	8-3-64														
APPRO			CHECK	BM	8-17-64														

DATE	CHANGE NO.	APPROVAL	DATE	CHANGE NO.	APPROVAL	DEVELOPMENT NO.
5-13-64	DEV3224					
7-27-64	160961					

C