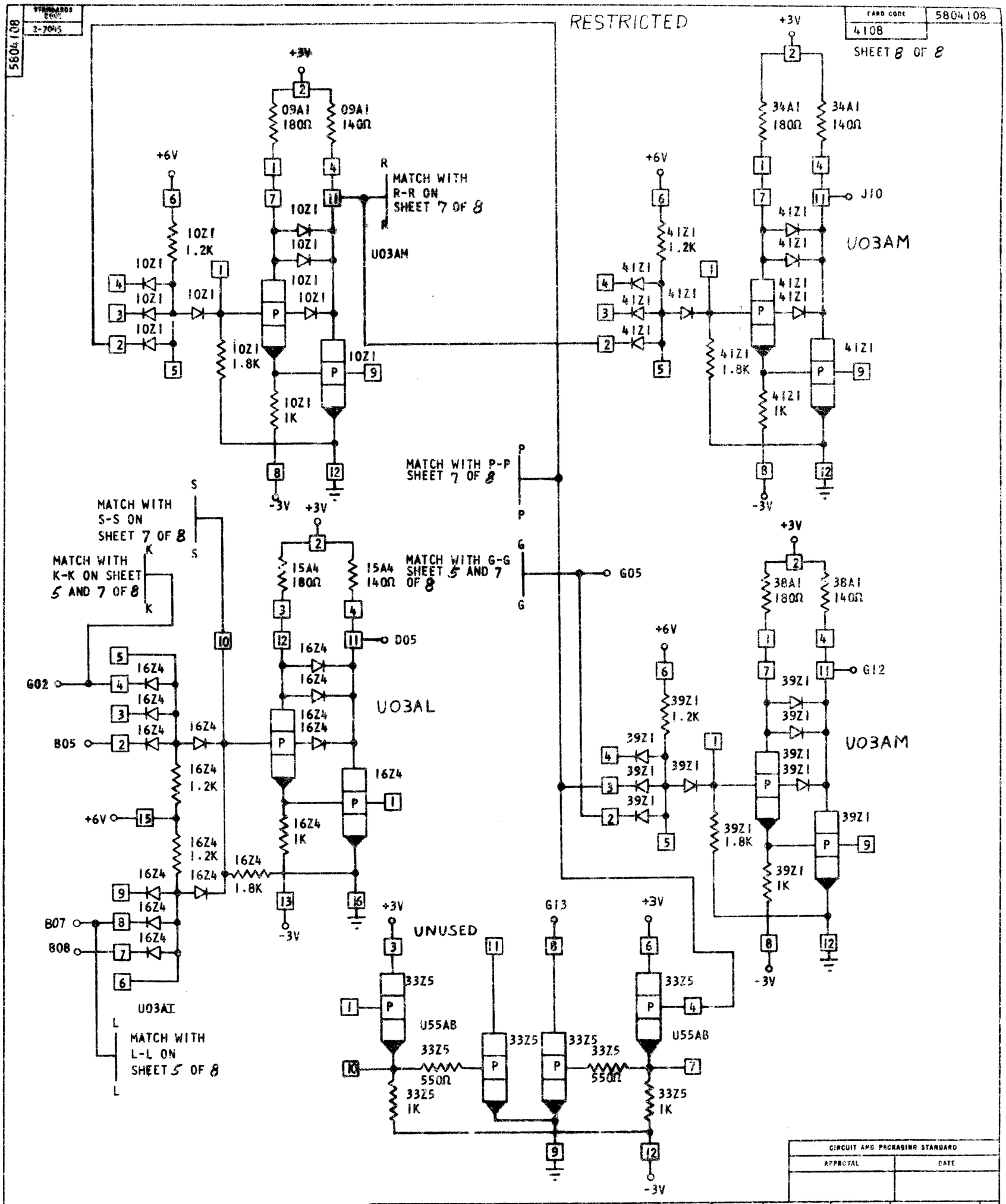

CIRCUIT AND PACKAGING STANDARD	
APPROVAL	DATE

INTERNATIONAL BUSINESS MACHINES CORP.						DATE	CHANGE NO.	APPROVAL	DATE	CHANGE NO.	APPROVAL	DEVELOPMENT NO.	5804108
NAME	CARD ASM - L REGISTER					5-13-64	DEV3224						
						7-27-69	160961						
DESIGN	CDA	9-26-63	MODEL	2070									
DETAIL	CDA	9-26-63	SCALE	NONE									
CHECK	CDA	10-1-63	DRAW	VE	10-4-64								
APPRO			CHECK	GM	8-17-64								

C