STANDARDS CODE	CIRCUIT AND PACKAGING STANDARD		SYM	DATE	CHANGE NO.	TECH APPRO	SYM	DATE	CHANGE NO.	TECH APPRO	DEVELOPMENT NO.	S/M
2-7046												
CARD CODE	APPROVAL	DATE			161331						5804109	
4109												

RESTRICTED

SHEET 4 OF 7

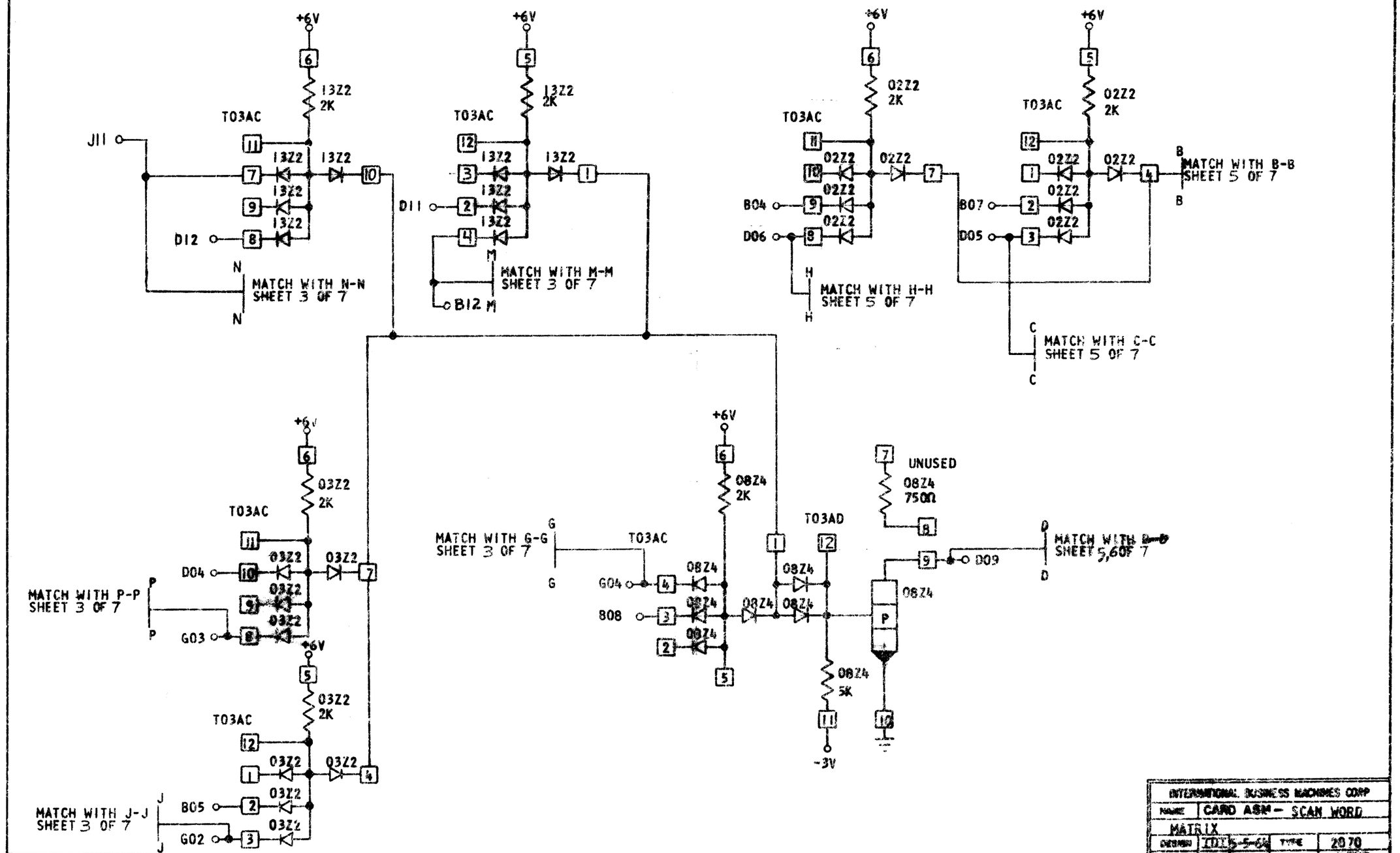

INTERNATIONAL BUSINESS MACHINES CORP				
NAME	CARD ASM – SCAN WORD MATRIX			
DESIGN	TDT 5-5-64	TYPE	2070	
DETAIL	TDT 5-5-64	SCALE	NONE	
CHECK	DAG 5-11-64	DRAW	VE	
APPRO		CHECK	TLS	

C 5804109