FORM 2-7046-6 (4-63)

RESTRICTED

STANDARDS CODE	CIRCUIT AND PACKAGING STANDARD		SYM	DATE	CHANGE NO.	TECH APPRO	SYM	DATE	CHANGE NO.	TECH APPRO	DEVELOPMENT NO.	G/N
2-7046				6-12-63	DEV 3622							
CARD CODE	APPROVAL	DATE		8-5-64	161739							
4124											5804124	

SHEET 7 OF 7

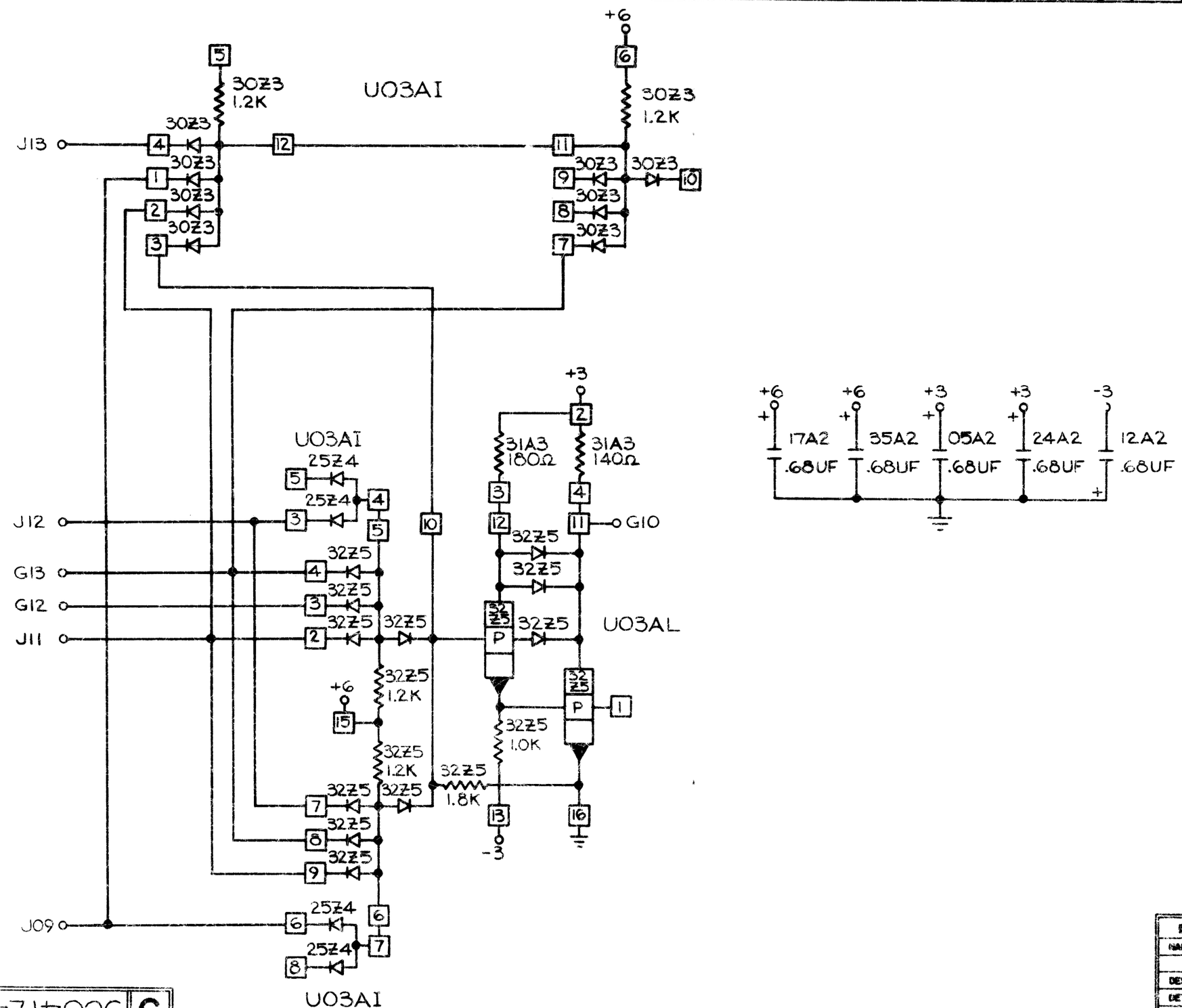

INTERNATIONAL BUSINESS MACHINES CORP				
NAME	CARD ASM-SHIFTER OVERFLOW			
DESIGN	C&D 9-5-63		TYPE	2070
DETAIL	C&D 9-5-63		SCALE	NONE
CHECK			DRAW	CDA 6-24-64
APPRO			CHECK	VB 7-31-64

C 5804124