STANDARDS CODE	CIRCUIT AND PACKAGING STANDARD		SYM	DATE	CHANGE NO.	TECH APPRO	SYM	DATE	CHANGE NO.	TECH APPRO	DEVELOPMENT NO.	G/M
2-7045	APPROVAL	DATE		12-06-63	DEV2354							
CARD CODE				7-28-64	161086							
4126											5804126	

RESTRICTED

SHEET 6 OF 8

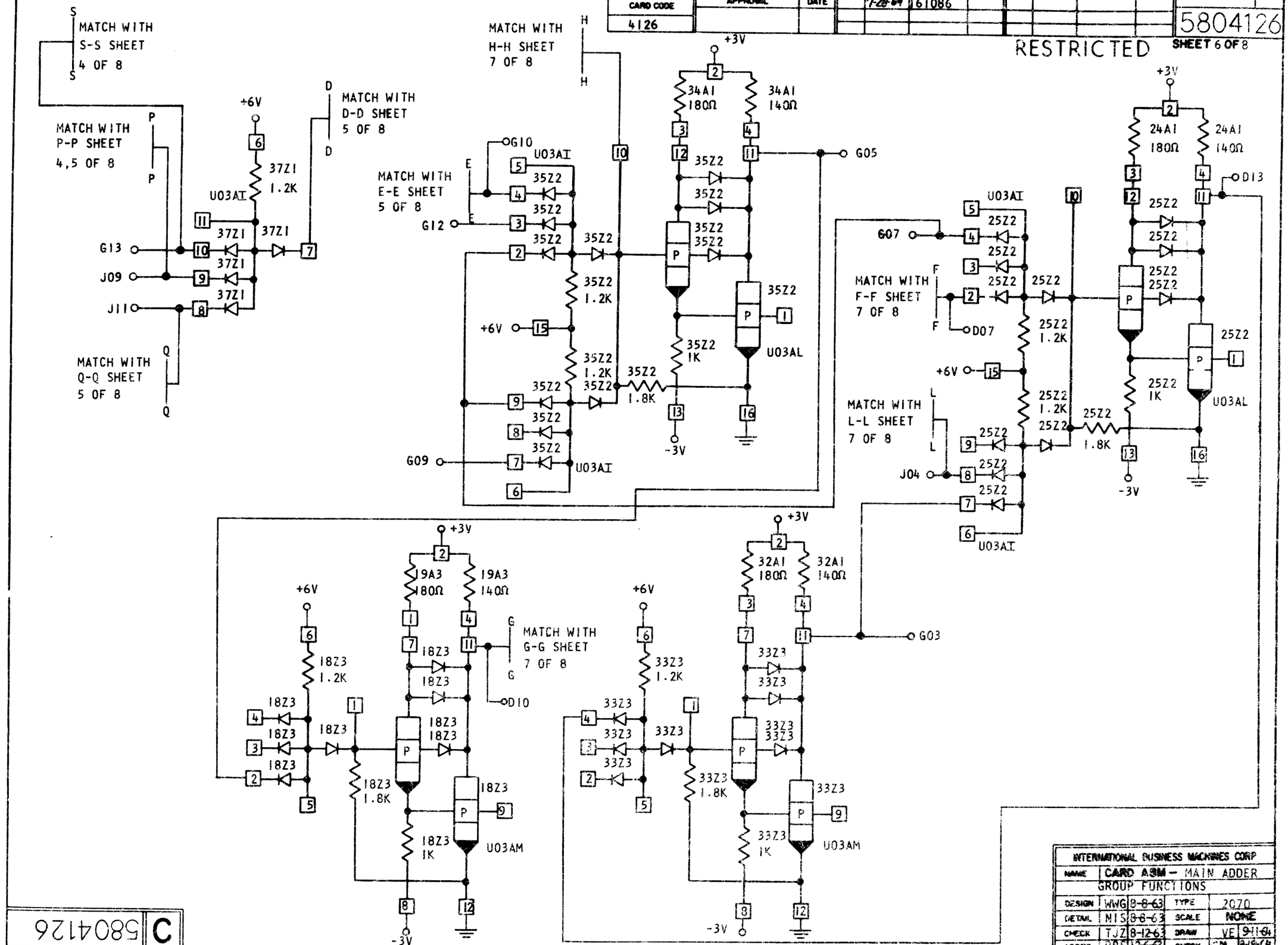

INTERNATIONAL BUSINESS MACHINES CORP				
NAME	CARD ASM – MAIN ADDER GROUP FUNCTIONS			
DESIGN	WWG 8-8-63	TYPE	2070	
DETAIL	MIS 8-8-63	SCALE	NONE	
CHECK	TJZ 8-12-63	DRAW	VE 9-11-64	
APPRO	RBS 12-6-63	CHECK	GM 9-8-64	

C 5804126