STANDARDS CODE	CIRCUIT AND PACKAGING STANDARD		SYM	DATE	CHANGE NO.	TECH APPRO	SYM	DATE	CHANGE NO.	TECH APPRO	DEVELOPMENT NO.	Q/M
2-7045	APPROVAL	DATE		12-06-63	DEV2354							
CARD CODE				7-28-64	161086							
4126											5804126	

SHEET 8 OF 8

RESTRICTED

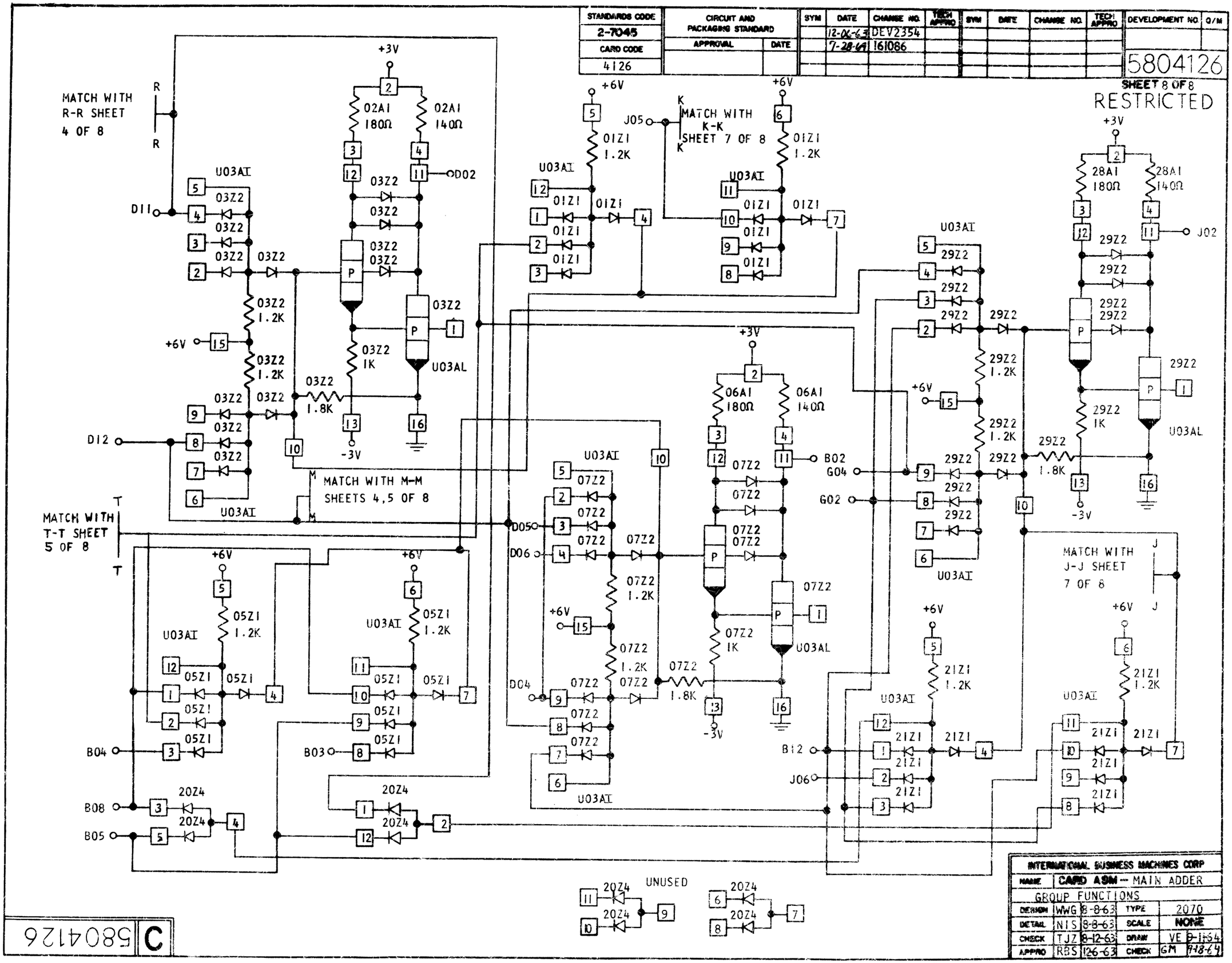

INTERNATIONAL BUSINESS MACHINES CORP					
NAME	CARD ASM — MAIN ADDER				
GROUP FUNCTIONS					
DESIGN	WWG	8-8-63	TYPE	2070	
DETAIL	NIS	8-8-63	SCALE	NONE	
CHECK	TJZ	8-12-63	DRAW	VE	9-1-64
APPRO	RBS	12-6-63	CHECK	GM	9-18-64

C 5804126