STANDARDS CODE	CIRCUIT AND PACKAGING STANDARD		SYM	DATE	CHANGE NO.	TECH APPRO	SYM	DATE	CHANGE NO.	TECH APPRO	DEVELOPMENT NO.	Q/M
2-7045				8-24-64	DEV2544							
CARD CODE	APPROVAL	DATE		8-10-64	161187							
4134											5804134	

SHEET 4 OF 12
RESTRICTED

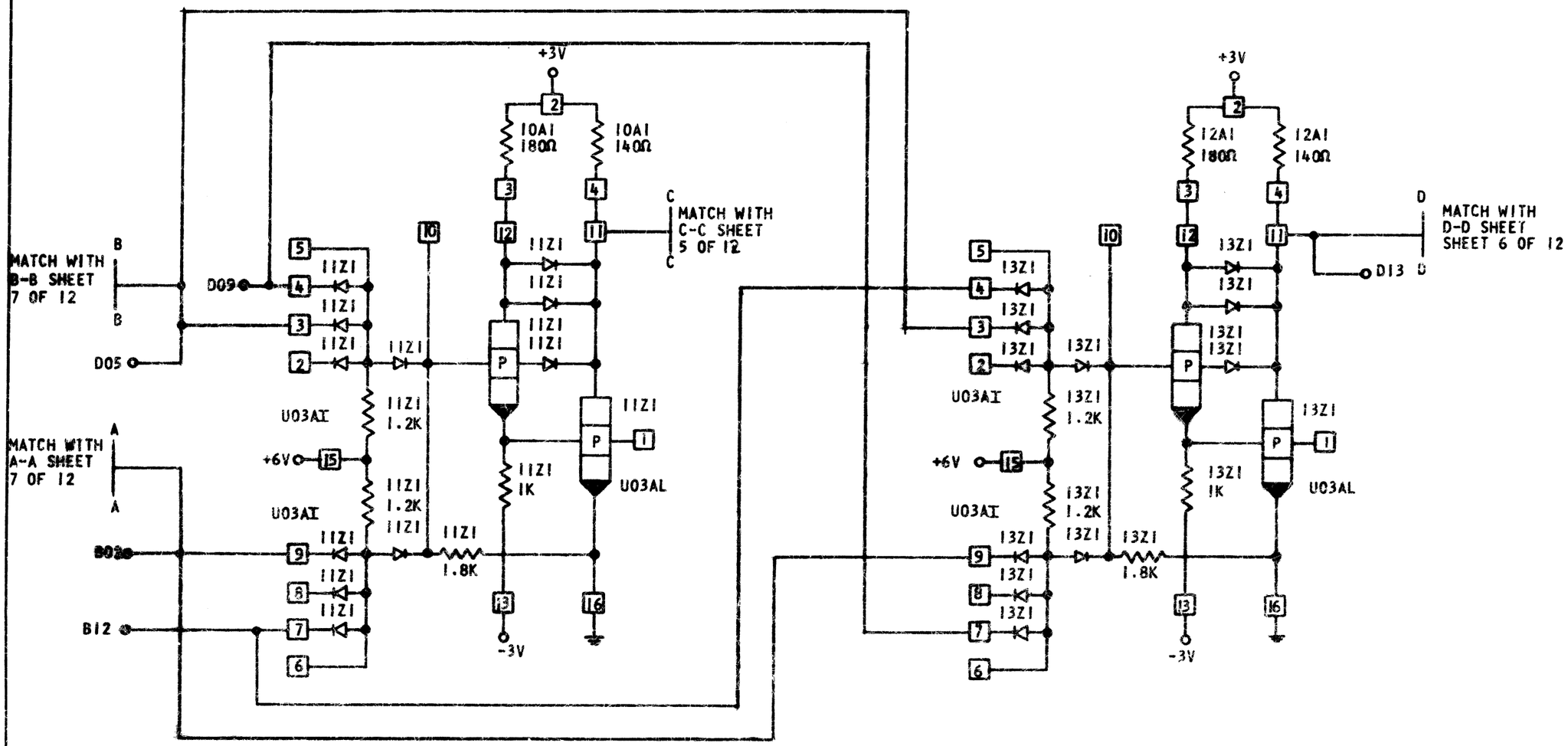

INTERNATIONAL BUSINESS MACHINES CORP				
NAME	CARD ASM — MAIN ADDER=			
	SUMS=0=3			
DESIGN	KAH	8-12-63	TYPE	2070
DETAIL	NIS	8-12-63	SCALE	NONE
CHECK	TJZ	8-16-63	DRAW	VE 8-3-64
APPRO	GHM	8-24-64	CHECK	GM 8-16-64

C 5804134